EcoCharger
Gas Fired Condensing Water Heater

Installation, Commissioning, User & Maintenance Instructions

Models:
ECH 32-220 G CE and PG CE
ECH 33-370 G CE and PG CE
ECH 52-370 G CE and PG CE
ECH 63-370 G CE and PG CE
ECH 87-480 G CE and PG CE
ECH 106-480 G CE and PG CE
ECH 129-480 G CE and PG CE

LV311723 | March 2024

Lochinvar®
HIGH EFFICIENCY BOILERS & WATER HEATERS

0311723 R2.8 / 1124 - Changes Reserved

IMPORTANT INFORMATION

These instructions must be read and understood before installing, commissioning, operating or maintaining the equipment.

Preface

Copyright

Copyright © 2016 Lochinvar Ltd.

All rights reserved.

Nothing from this publication may be copied, reproduced and/or published by means of printing, photocopying or by whatsoever means, without the prior written approval of Lochinvar Ltd..

Lochinvar Ltd. reserves the right to modify specifications in this manual.

Trademarks

Brand names in this manual are registered trademarks of their respective owners.

Warranty

Refer to the appendix Warranty (see section 12.8) for the warranty provisions.

Liability

Lochinvar accepts no liability for claims from third parties caused by:

- unauthorized use
- use other than stated in this manual
- use other than in accordance with the General Conditions registered at the Chamber of Commerce.

For more information, refer to the General Conditions. These are available on request, free of charge.

We believe that this manual provides you with accurate and complete descriptions of all relevant components. If you, nonetheless find errors or inaccuracies in this manual, please inform Lochinvar. This helps us to further improve our documentation.

Compliance

To safely produce domestic hot water, the design and construction of the ECH water heaters is in accordance with:

- the European Regulations 2016/426 on appliances burning gaseous fuels (GAR).
- the European Standard for Gas–fired storage water heaters for the production of domestic hot water (EN89).
- The European ECO-Design Directive.
- The European Energy Labeling Directive

Refer to the appendix Declaration of conformity.

Regulations

It is law that all gas appliances are installed by competent persons, in accordance with The Gas Safety (Installation and Use) Regulations 1998. Failure to install appliances correctly could lead to prosecution. It is in your own interest, and that of safety, to ensure that this law is complied with. The installation of the equipment MUST be in accordance with the relevant requirements of the Gas Safety Regulations, Building Regulations, I.E.E. Regulations and the bylaws of the local water undertaking. The installation should also be in accordance with any relevant requirements of the local gas distributor and local authority.

In addition the installation should follow the relevant guidance offered in the following documents. It is not practical to list all relevant information but emphasis is placed on the following documents, as failure to comply with the guidance given will almost certainly result in an unsatisfactory installation:

- BS EN 1858: 2008 + A1: 2011
  Chimneys. Components. Concrete flue blocks.
- BS 5440-1: 2008
  Flueing and ventilation for gas appliances of rated input not exceeding 70 kW net (1st, 2nd and 3rd family gases). Specification for installation of gas appliances to chimneys and for maintenance of chimneys.
- BS 5440-2: 2009
  Installation and maintenance of flues and ventilation for gas appliances of rated input not exceeding 70 kW net (1st, 2nd and 3rd family gases). Specification for installation and maintenance of ventilation for gas appliances.
- BS 6644: 2011
  Specification for Installation of gas-fired hot water boilers of rated inputs between 70 kW (net) and 1.8 MW (net) (2nd and 3rd family gases).
- BS 6700: 2006 +A1: 2009
  Design, installation, testing and maintenance of services supplying water for domestic use within buildings and their curtilages.
- BS 6880: 1988 Parts 1, 2 and 3
  Code of practice for low temperature hot water systems of output greater than 45 kW.
- BS 7074: 1989 Parts 1 and 2
  Application, selection and installation of expansion vessels and ancillary equipment for sealed systems.
- BS 7671: 2008 + A1: 2011
  Requirements for electrical installations, I.E.E. wiring regulations seventeenth edition.
- BS 7671: Amendment 2: August 2013
- CP 342 (Part 2 1974):
  Code of practice for centralised hot water supply-buildings other than dwellings.

If the ECH water heater is to be used in an unvented system installation, the system should follow the guidance given in BS 6700, BS 8558 and must comply with the Building Regulations 1992: Part G3, in England and Wales, P5 in Northern Ireland and P3 in Scotland and the Water Supply (Water Fittings) Regulations 1999, The Water Supply (Water Quality) Regulations (Northern Ireland) 2017 and the Public Water Supplies (Scotland) Amendment Regulations 2017.

A kit of parts is available from Lochinvar.

Institute of Gas Engineers and Managers (IGEM) Publications

- IGE/UP/1 - Edition 2:
  Installation pipework on industrial and commercial premises.
- IGE/UP/2:
  Gas installation pipework, boosters and compressors on industrial and commercial premises.
- IGE/UP/4 - Edition 3:
  Commissioning of gas-fired plant on industrial and commercial premises.
- IGE/UP/10 - Edition 3:
  Installation of flued gas appliances in industrial and commercial premises.

Gas Safety (Installation and Use) Regulations 1998

- CIBSE: Guides
- Part A Environmental Design
- Part G Public health engineering
- H.S.E. guidance
- INDG 436 Safe management of industrial steam & hot water boilers
- SAFED BG01Guidance on safe operation of boilers
- Third edition of the 1956 Clean Air Act Memorandum on Chimney Heights

Note
Manufacturer's notes must not be taken in any way as overriding statutory obligations.

Contact information

In the event of problems with your gas, electricity or water supply connections or when you have any comments or questions, please contact your supplier.

About this manual

Scope

This manual gives information about safe and correct use of the water heater and how installation, maintenance and service activities have to be done correctly. You must obey the instructions in this manual.

Caution
Read this manual carefully before you start the water heater. It can cause personal injury and damage to the water heater when you do not read the manual and/or do not obey the instructions.

The purpose of this manual is to:

- describe the working principles and layout of the water heater
- explain the safety devices
- highlight possible hazards
- describe the use of the water heater
- describe the installation, service and maintenance of the water heater

This manual has two parts:

- An User part that describes the correct usage of the water heater.
- An Installation, Maintenance and Service part, that describes the correct installation and maintenance procedures.

Target group

The information in this manual applies to three target groups:

- users
- installation engineers
- service and maintenance engineers

The User part is intended for the (end) users. The Installation, Maintenance and Service part is intended for the installation engineers and the service and maintenance engineers.

Notation conventions

This manual uses the following text conventions:

- Numbers between parentheses e.g. (1), refer to elements in a figure that are described by the text.
- Texts displayed on the user interface always are shown similar to the characters in the display, for example WEEK PROGRAM, SETTINGS.
- Buttons are always shown between brackets, for example: **[⬆]**, **[ENTER]**, **[RESET]**.
- Cross-references to sections, tables, figures etc. are underlined and written as (see section "..."). In the digital version, the cross-references function as hyperlinks that can be used to navigate through the manual by clicking on them. Example: Safety (see section 2).

This manual contains the following text styles/symbols for situations that may endanger users/engineers, cause damage to equipment or need special attention:

Note
A note gives more information on a topic.

Caution
Obey the caution instructions to prevent damage of the water heater.

Warning
Obey the warning instructions to prevent danger of personal injury, and serious damage to the water heater.

Document identification

Article number	Language	Version
0311723	EN	2.8

Table of Contents

Preface **3**
Copyright 3
Trademarks 3
Warranty 3
Liability 3
Compliance 4
Regulations 4
Contact information 5

About this manual **7**
Scope 7
Target group 7
Notation conventions 7
Document identification 8

User part **13**

1 Introduction **15**

2 Safety **17**

3 Interface **19**
3.1 Operator interface 19
3.2 Explanation of icons 19
3.3 Control switch 20
3.4 Buttons 20
3.5 PC connection 20
3.6 Status of the water heater 21
3.6.1 Operating modes 21
3.6.2 Error conditions 22
3.6.3 Service conditions 23
3.6.4 Anode warning 23

4 Use **25**
4.1 Turn on the water heater 25

4.1.1 The appliance's heating cycle..... 25
4.2 Turn off the water heater.....27
4.2.1 Turn off for a short period.....27
4.2.2 Isolate from the mains..... 28
4.2.3 Turn off for a long period.....28
4.3 Main menu..... 29
4.3.1 Notation conventions for menu-related instructions..... 29
4.3.2 Switching to ON mode.....30
4.3.3 Setting the water temperature..... 30
4.3.4 Week program..... 30
4.3.5 Starting and stopping the week program..... 31
4.3.6 Changing the appliance's standard week program..... 31
4.3.7 Adding times to a week program..... 34
4.3.8 Deleting times from a week program.....35
4.3.9 Extra period.....36
4.3.10 Settings..... 38

Installation, Maintenance and Service part..... 41

5 Introduction.....43
5.1 About the water heater..... 43
5.2 The appliance's heating cycle..... 43
5.3 Working principle.....43
5.4 Operating cycle..... 45

6 Safety.....47
6.1 Safety instructions.....47
6.2 Instructions on the water heater.....48
6.3 Safety devices.....49
6.3.1 Protection for the water heater.....49
6.3.2 Safety of the installation.....50
6.4 Environmental aspects..... 50
6.4.1 Recycling.....50
6.4.2 Disposal..... 51

7 Installation..... 53
7.1 Packaging.....53
7.2 Conditions..... 53
7.2.1 Ambient conditions..... 53
7.2.2 Maximum floor load..... 53
7.2.3 Water composition.....54

7.2.4 Working clearances....54
7.3 Installation diagram....55
7.4 Water connections....56
7.4.1 Unvented water connections....56
7.4.2 Vented water connections....57
7.5 Gas connection....58
7.6 Venting system....58
7.6.1 C13/C33 concentric systems....60
7.6.2 C13/C33 parallel systems....62
7.6.3 C43/C53/C63 systems....64
7.7 Electrical connections....65
7.7.1 Preparation....65
7.7.2 Mains power....66
7.7.3 Optional electrical connections....66
7.8 Commissioning....67
7.8.1 Filling....67
7.8.2 Procedure for checking the supply pressure....68
7.8.3 Procedure for checking the gas control valve pressure....70
7.8.4 CO_2 adjustment....71
7.8.5 Switching pressure measurement....74
7.8.6 Turn on the water heater....74
7.9 Decommisioning....74
7.9.1 Turn off the water heater....74
7.9.2 Draining....74

8 Conversion of gas type....77

9 Settings....79

9.1 Operator interface....79
9.2 Service program....79
9.2.1 Hysteresis....79
9.2.2 Display the error history....80
9.2.3 Display the water heater history....80
9.2.4 Display the selected water heater....81
9.2.5 Switch the pump on or off....81
9.2.6 Setting the service interval....81
9.2.7 Service mode....82
9.2.8 Setting legionella prevention....82
9.2.9 Setting the central heating configuration....83

10 Maintenance....85

10.1 Preparation....85
10.2 Water-side maintenance....86
10.2.1 Descale the tank.... 86
10.2.2 Clean the condensate drain....87
10.3 Gas-side maintenance....87
10.3.1 Clean the burner.... 87
10.3.2 Clean the heat exchanger....87
10.4 Finalization....88

11 Troubleshooting.... 89
11.1 Errors and warnings....89
11.1.1 General errors....90
11.1.2 Displayed errors....91
11.1.3 Warnings....96

12 Appendices....97
12.1 Technical details....97
12.2 Dimensions....101
12.3 Gas details....105
12.4 Week program card....107
12.5 Electrical wiring diagram....109
12.6 Menu structure....111
12.7 Declaration of conformity....112
12.8 Warranty....113

Index.... 115

User part

1 Introduction

The ECH water heater stores and heats water for sanitary purposes.

Cold water enters the bottom of the tank through the water inlet (1). The heated water leaves the tank at the top through the hot water outlet (2). To operate the water heater, the operator interface (3) and control switch (4) are used.

Fig. ECH water heater

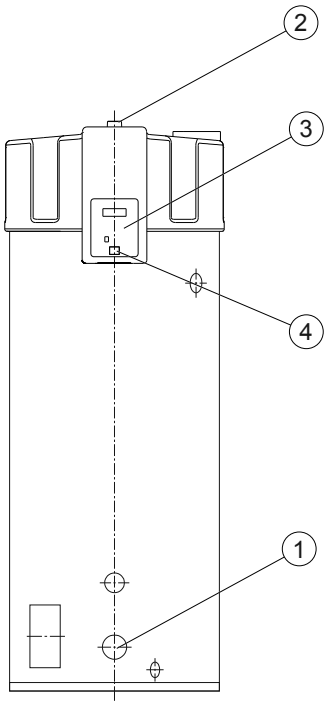

1. Water inlet
2. Water outlet
3. Operator interface
4. Control switch

2 Safety

Lochinvar cannot be held responsible for damages or injuries leading back to:

- Failure to follow the instructions provided in this manual.
- Carelessness during use or maintenance of the water heater.

Every user has to study the user part of this manual and has to follow the instructions in this part of the manual strictly. Do not change the sequence of the actions to be done. This manual has to be available for the user and service engineer all the time.

Warning
If you smell gas:

- Shut off the mains gas supply valve!
- Avoid causing sparks! Do not use any electrical equipment or switch, i.e. no telephones, plugs or bells!
- No naked flames! No smoking!
- Open windows and doors!
- Warn occupants and leave the building!
- After leaving the building, alert the gas distribution company or your installation engineer.

Caution
Do not store or use chemical substances in the room where the water heater is installed because of the risk of explosion and corrosion of the water heater. Some propellants, bleaching agents and degreasing agents etc. disperse of explosive vapors and/or cause accelerated corrosion. If the water heater is used in a room where such substances are stored or used, the warranty will be void.

Caution
Installation, maintenance and service may only by carried out by a qualified engineer.

Caution
The water heater is not intended for use by persons with reduced physical, sensory or mental capacities, or who lack the necessary experience or knowledge. When the person responsible for their safety is supervising them or has explained to them how the water heater should be used, these persons can use the water heater.

Caution
This water heater is not intended to be used by children. Always supervise children, and make sure that they do not play with the water heater.

Note
Regular maintenance extends the service life of the water heater. To determine the correct service interval, the service and maintenance engineer has to do a check on both the water and gas side of the water heater three months after installation. Based on this check, the best service interval can be determined.

3 Interface

3.1 Operator interface

The operator interface is completely menu-driven, and comprises:

- a 4-line display with 20 characters per line;
- 6 buttons for controlling the water heater (below the display);
- 6 graphical symbols (above the display);
- a connector for a service PC;
- a **control switch**.

The buttons are divided into three groups:

- Navigation buttons:
  - Buttons for UP **[🡅]**, and DOWN **[🡇]**;
  - Enter: **[ENTER]**.
  - Reset button: **[RESET]**.
- The main menu (see section 4.3): **[🛁]**;
- The service program (see section 9.2): **[🔧]**.
  This chapter is specifically intended for the service and maintenance engineer and installation engineer.

In this manual, the display of the operator interface is shown as in the figure, both with and without icons.

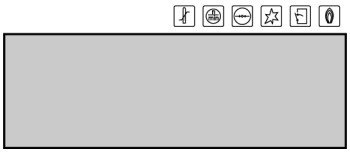

3.2 Explanation of icons

The table explains the meanings of the icons.

	Name	**Explanation**
	Heat demand	Heat demand detected
	Purge	Pre- and post-purge using fan
	Pressure switch	Pressure switch is closed
	Glow	(Pre)glow
	Gas control valve	Gas control valve open/ignition
	Flame detection	Water heater operational

3.3 Control switch

The **control switch** of the controller turns the water heater **ON** and **OFF**. Note that in the **OFF** position the water heater remains electrically live, in order for the continuous pump to stay running.

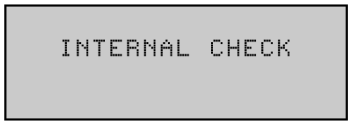

After switching on, the text INTERNAL CHECK appears on the display for about 10 seconds. The main menu (see section 4.3) then appears. If no selection is made in the main menu, the water heater automatically switches to the **OFF mode** (see section 3.6.1).

Note
To electrically isolate the water heater, you must use the isolator between the water heater and the mains power supply.

3.4 Buttons

The use of these buttons is explained with the help of the figure showing the main menu (see section 4.3).

The buttons are:

- Buttons for UP **[↑]**, and DOWN **[↓]**;
- Enter: **[ENTER]**;
- Reset button: **[RESET]**.

The arrows ▲ and ▼ indicate that you can scroll up and/or down. Use **[↑]** and **[↓]** to scroll.

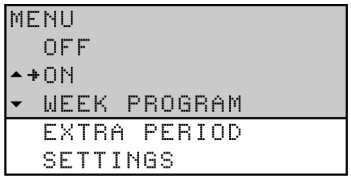

The cursor → points to the option to be activated. In the display as shown in the figure, you can scroll through the main menu.

The main menu comprises: **OFF**, **ON**, **WEEK PROGRAM**, **EXTRA PERIOD** and **SETTINGS**. You have to scroll down further to see the options **EXTRA PERIOD** and **SETTINGS**.

The selected option is confirmed using **[ENTER]**.

Pressing **[RESET]** takes you back one page in a menu and discards all options selected in the current menu.

Note
[RESET] is also used to reset the water heater following an error.

3.5 PC connection

The PC connection is exclusively intended to enable technicians from Lochinvar to read the status and history of the water heater. These details can be important for troubleshooting and/or resolving complaints.

3.6 Status of the water heater

During operation, the display shows the status of the water heater.

3.6.1 Operating modes

When running, the water heater has four basic operating modes, namely:

- OFF (see section 3.6.1.1)
- ON (see section 3.6.1.2)
- EXTRA (see section 3.6.1.3)
- PROG (see section 3.6.1.4)

3.6.1.1 OFF

In this mode, the frost protection is activated. The figure shows the display with the following information:

- line one: the text OFF;
- line two: the time, the day and T_1 (see section 4.1.1).
- lines three and four: the text FROST PROTECTION ACTIVATED.

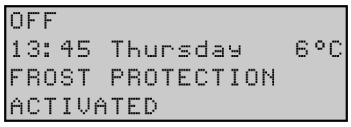

3.6.1.2 ON

In this mode, the water heater continually responds to the hot water demand. The figure shows the display with the following information:

- line one: the text ON;
- line two: the time, the day and T_1 (see section 4.1.1).
- line three: the programmed water temperature T_{set};
- line four: is empty when the water heater is idle, or depending on the operating cycle (see section 4.1.1), displays a text such as HEAT DEMAND.

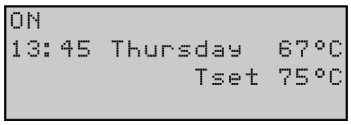

3.6.1.3 EXTRA

In this mode, one extra period is programmed and activated. In this mode, the OFF or PROG mode is temporarily overruled to fulfill a single period of demand. When the period has passed, the water heater automatically returns to the previous operating mode. The figure shows the display with the following information:

- line one: the text EXTRA;
- line two: the time, the day and T_1 (see section 4.1.1);
- line three: the switch-on time and the related water temperature setting;
- line four: the text PERIOD ACTIVATED.

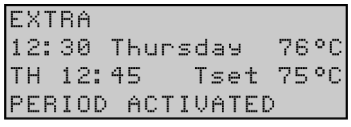

3.6.1.4 PROG

In this mode a preset week program is active, and the water heater responds continually to demand within the time periods set in the week program. There are two distinct situations possible in this mode:

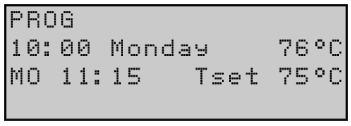

1. *The current time falls within a set time period of the week program.*
   The figure shows the display with the following information:
   - line one: the text PROG;
   - line two: the time, the day and T_1 (see section 4.1.1);
   - line three: the next scheduled switch-off time and the water temperature T_{set} of the active period;
   - line four: is empty, or depending on the operating cycle (see section 4.1.1), displays a text such as HEAT DEMAND.

   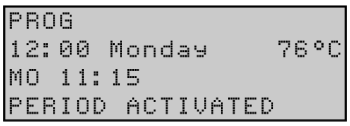

2. *The current time falls outside a set time period of the week program.*
   The figure shows the display with the following information:
   - line one: the text PROG;
   - line two: the time, the day and T_1 (see section 4.1.1);
   - line three: the next scheduled switch-on time;
   - line four: displays the text PERIOD ACTIVATED.

In all modes, the temperature may at any moment drop below the desired temperature. The water heater then enters an operating cycle. This operating cycle (see section 4.1.1)is identical for all basic operating modes.

Note
Setting and if necessary programming of the basic operating modes are described in the main menu chapter (see section 4.3).

3.6.2 Error conditions

The figure shows an example of an error condition. If the water heater enters this condition, the display will show the following information:

- line one: error code comprising a letter and two digits, followed by the error description;
- lines two to four: alternately, a brief explanation of the error, and a brief action to resolve the error.

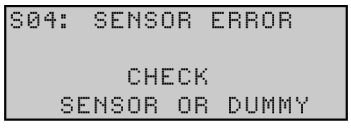

Note
When the display shows an error code, try to reset the water heater with **[RESET]**. Contact your service and maintenance engineer or supplier when the water heater does not restart or when the display shows the error code again.

3.6.3 Service conditions

The figure shows the message SERVICE REQUIRED. If this message appears, the water heater needs a service and maintenance inspection. In this case, contact your service and maintenance engineer.

Note
Regular maintenance extends the service life of the water heater.

Note
The message SERVICE REQUIRED is based on the number of expired burning hours and the preset service interval. If the service interval has been incorrectly selected, contact the service and maintenance engineer for instructions on how to rectify this. Information on the frequency of maintenance is provided elsewhere in the manual (see section 10).

3.6.4 Anode warning

This message appears when the anode protection is no longer active. If the message appears, you must contact your service and maintenance engineer.

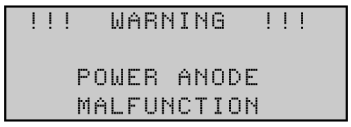

Note
The water heater continues to function when this message appears. If you ignore the anode warning, the tank protection cannot be guaranteed. The warranty will be void.

4 Use

4.1 Turn on the water heater

Start the water heater as follows:

1. Fill the water heater (see section 7.8.1).
2. Open the manual gas valve.
3. Switch on the power to the water heater using the isolator between the water heater and the power supply.
4. Switch the controller **ON** by setting the **control switch** to position **I**.
   The display will now show INTERNAL CHECK for about 10 seconds and will then go to the main menu.

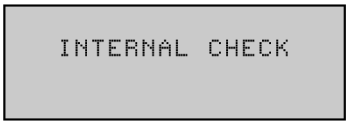

5. Press once on the blue arrow **[🡻]** to position the cursor beside **ON**, then press **[ENTER]**. The display shown in the figure will appear.

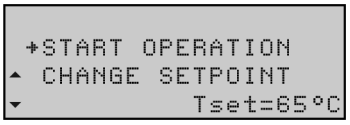

6. Confirm the selection START OPERATION with **[ENTER]** .
   The appliance is now in **ON mode**. If there is a heat demand, the appliance will run through the heating cycle (see section 4.1.1).
   If the heating cycle is not run, there is no heat demand; if this is the case, T_{set} will probably need to be set (see section 4.3.3).

4.1.1 The appliance's heating cycle

The entire cycle is explained in the following example, which assumes the water heater is in operating mode ON.

Note
The same operating cycle applies to the other operating modes.

When the water heater starts, it will run through the following steps:

1. The water temperature drops below the set temperature of (for example) 65°C. The controller detects a heat demand and starts the operating cycle.
   - The icon is activated.
   - The message HEAT DEMAND appears.

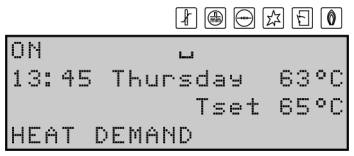

2. Once demand is registered, the fan is started to vent any gases that may be present. This phase is called pre-purge and lasts about 15 seconds.
   - The icon is activated.
   - The message PRE PURGE appears.

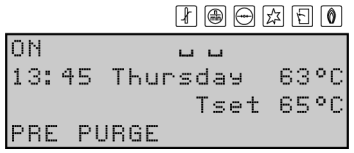

3. During the pre-purge, the pressure switch closes.
   - The icon is activated.
   - The message PRESSURE SWITCH appears.

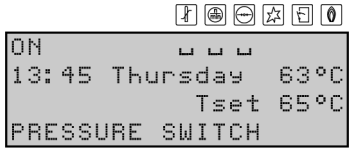

4. This is then followed by the (pre-)glow of the hot surface igniter.
   - The icons and are dimmed
   - The icon is activated.

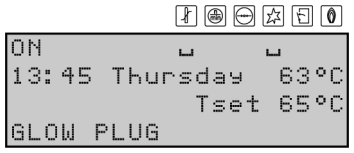

5. After a number of seconds pre-glow, the gas control valve is opened and ignition takes place.
   - The icon is activated.
   - The message IGNITION appears.

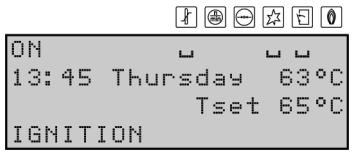

6. After ignition, the flame is detected and the appliance will be running. This means that actual heating has started:
   - The icon is dimmed.
   - The icon is activated.
   - The message RUNNING appears.

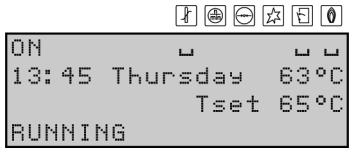

7. When the water is up to temperature, the heat demand ceases and the post-purge starts. This takes about 25 seconds.
   - The icons , and are dimmed.
   - The icon is activated.
   - The message POST PURGE appears.

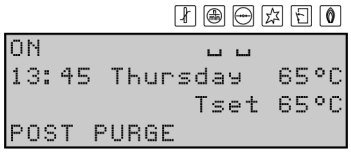

8. Following the post-purge, the fan stops and the pressure switch opens:
   - The icons and are dimmed.
   - The message POST PURGE vanishes.

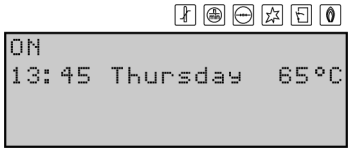

With any subsequent heat demand, the heating cycle will resume from step 1.

4.2 Turn off the water heater

4.2.1 Turn off for a short period

To decommission the water heater for a short period, you must activate the frost protection. The frost protection will prevent water from freezing in the water heater.

Activate the frost protection as follows:

1. Press **[]** to select the main menu.
2. Using **[⬆]** and **[⬇]**, place the cursor beside OFF.
   Confirm with **[ENTER]**.

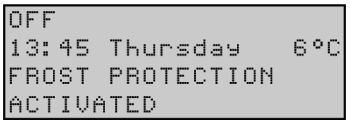

The frost protection cuts in when the water temperature drops below 5°C. The text FROST will then appear on line one of the display. The water heater will heat the water to 20°C (T_{set}) before dropping back to mode OFF.

Caution
The anode protection remains active when the **OFF mode** is selected.

Note
These values of 5°C and 20°C cannot be adjusted.

Note
If the water heater is not used for longer than two months and the water is not drained, air bubbles may form in the water heater. This can lead to air in the water pipes.

4.2.2 Isolate from the mains

The water heater may only be isolated from mains power in the correct way. The correct procedure is as follows:

1. Activate the MENU with **[⌓]**.
2. Position the cursor in front of OFF.
3. Confirm OFF with **[ENTER]**.

Caution
Failure to wait until the fan stops can cause damage to the water heater.

4. Wait until the fan has stopped. The icon ⏻ is then dimmed.
5. Switch the water heater **OFF** (position **0**) using the **control switch** on the operator interface.
6. Isolate the water heater from the power supply by setting the isolator between the water heater and the mains power supply to position **0**.

Note
Setting the main switch between the water heater and the electricity mains to **0** will switch off the power supply to the potentiostat; there is then no longer any anode protection.

4.2.3 Turn off for a long period

When the water heater needs to be turned off for more than 2 months, contact your service and maintenance engineer to decommission the water heater.

4.3 Main menu

The MENU is reached by pressing **[🕮]** on the operator interface.

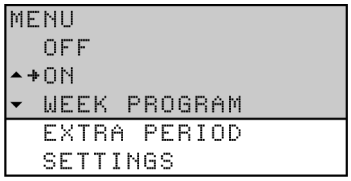

The main menu comprises:

- OFF
  Select this option if you wish to turn off the water heater for a short period (see section 4.2), but do not wish to drain it. In this mode, the frost protection is active. This prevents water from freezing in the water heater.
- ON
  In this mode, the water heater continually responds to the hot water demand (see section 4.3.2).
- WEEK PROGRAM
  Select this option to allow the water heater to respond to demand only during pre-programmed periods (see section 4.3.4). Outside those periods, only frost protection is active.
- EXTRA PERIOD
  Select this option to overrule **OFF mode** or **PROG mode** (i.e. Week program) so that a single temporary period (see section 4.3.9) of heat demand will be fulfilled.
- SETTINGS
  Select this option to set the language and the time (see section 4.3.10). You can also use this option to display the regulation interval (temperature), and the ignition and working speeds of the fan.

Note
If you fail to make any selection with the main menu open, then after 30 seconds, the water heater will automatically return to the mode it was previously in.

4.3.1 Notation conventions for menu-related instructions

The MENU **[🕮]** of the controller is divided into submenus. For example, SETTINGS is one of the functions reached from the main menu. The menu SETTINGS is itself divided into sub-menus. For example, LANGUAGE is a sub-menu of SETTINGS.

So, for example, to select menu LANGUAGE, this manual employs the following convention:

- **[🕮]**: SETTINGS | LANGUAGE
  Confirm with **[ENTER]**.

This means:

1. **[🕮]**: Activate the main menu with **[🕮]**.
2. SETTINGS: Using **[🡅]** and/or **[🡇]** to go to SETTINGS and confirm with **[ENTER]**.
3. LANGUAGE: Using **[🡅]** and/or **[🡇]** to go to LANGUAGE
4. Confirm with **[ENTER]**. After pressing **[ENTER]**, you will have activated sub-menu LANGUAGE.

4.3.2 Switching to ON mode

You can switch the water heater to **ON mode** from any operational mode, as follows:

1. **[⌓]**: ON | START OPERATION
   Confirm with **[ENTER]**.

Note
Also refer to the chapter on starting the water heater (see section 4.1).

4.3.3 Setting the water temperature

4.3.3.1 Setting the water temperature via the SET POINT menu

The water temperature can be set to any value between 40°C and 80°C.

Set the water temperature via:

1. **[⌓]**: ON | CHANGE SETPOINT
   Confirm with **[ENTER]**.

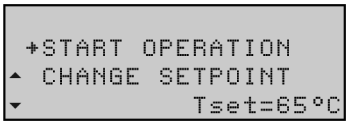

2. Use:
   - **[↑]** to increase the value;
   - **[↓]** to decrease the value.
   - Confirm with **[ENTER]**.After confirming, the appliance enters **ON mode**.

Note
If the preset temperature is higher than the current water temperature, then the appliance might not immediately start the heating cycle. To prevent excessively frequent switching on and off, there is a heating margin. The standard setting for this margin is 5°C. The appliance starts heating up if the water temperature is 5°C below the SETPOINT. We refer to this margin as the hysteresis. The service and maintenance engineer can set the hysteresis value.

4.3.3.2 Setting water temperature during ON mode

The water temperature can also be directly adjusted when the water heater is in **ON mode**.

Simply use:

- **[↑]** to increase the value;
- **[↓]** to decrease the value.
- Confirm with **[ENTER]**.

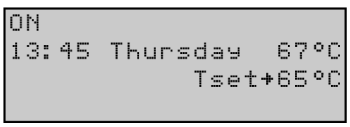

4.3.4 Week program

Using the week program, you can set the water temperature for the days and times you want.

If the appliance is running under a week program, then this is indicated on the display by the text PROG on the first line (see the figure). The second line shows the time of day, the

day of the week and the temperature. The third line shows the next switching time of the week program and the programmed temperature. The fourth line shows the text PROGRAM ACTIVATED.

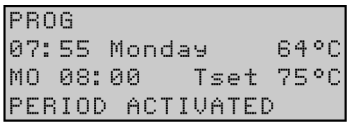

The appliance's default week program switches the appliance on every day at 00:00 and off at 23:59. The default water temperature setting is 65 ºC.

If you want, you can change every setting in the appliance's standard week program.

If the water temperature becomes too low while the week program is running, the appliance will run through the heating cycle (see section 4.1.1) and return to the week program.

The following topics are covered here:

- Starting and stopping the week program (see section 4.3.5)
- Changing the appliance's standard week program (see section 4.3.6)
- Adding times to a week program (see section 4.3.7)
- Deleting times from a week program (see section 4.3.8)

4.3.5 Starting and stopping the week program

The week program can be started up from any other operating mode, as follows:

1. **[🕮]**: WEEK PROGRAM | START OPERATION
   Confirm with **[ENTER]**.

A week program can be shut down simply by activating a different operating mode, for example the **ON mode**.

4.3.6 Changing the appliance's standard week program

Note
First fill-in the desired week program on the supplied week program card.

A week program is made up of a number of programmable periods in which you can have the appliance switch on and off. A period consists of:

- switch-on time: day of the week, hours and minutes
- switch-off time: hours and minutes
- the water temperature setting
- on/off setting for a program-controlled pump.

Note
The switch-off time must always be followed by a switch-off time on the same day of the week. A maximum of three periods may be programmed per day. You can program a maximum of 21 periods.

Call up the menu for the week program as follows:

- **[🕮]**: WEEK PROGRAM | PROGRAM OVERVIEW.
  Confirm with **[ENTER]**.

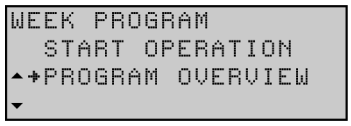

The display shows the menu for the week program, see the figure below. With the default setting, the program switches on and off every day at 00:00 and 23:59 respectively, the water temperature is 65ºC and the pump is switched on (P).

```
    DAY TIME  Tset
ON →SU  00:00 65°C P
OFF SU  23:59
ON  MO  00:00 65°C P
OFF MO  23:59
ON  TU  00:00 65°C P
OFF TU  23:59
ON  WE  00:00 65°C P
OFF WE  23:59
ON  TH  00:00 65°C P
OFF TH  23:59
ON  FR  00:00 65°C P
OFF FR  23:59
ON  SA  00:00 65°C P
OFF SA  23:59
    INSERT
    DELETE
    START OPERATION
```

E*xample*
As an example, we will set the switch-on time for Sunday to 08:15 hours, and the matching switch-off time to 12:45 hours. The water temperature will be set to 75ºC and the pump will run continuously.

The following settings are entered one by one using the menus: the switch-on time, the switch-off time, the desired water temperature, and the mode of the program-controlled pump.

4.3.6.1 Week program: setting the switch-on time

1. Bring the cursor to SU
   Confirm with **[ENTER]**.

```
ON  →SU 00:00
OFF  SU 23:59
Tset 65°C
PUMP ON          SAVE
```

   The day indicated by → blinks.
2. Use **[↑]** and **[↓]** to set the desired day. In the example this is SU (Sunday).
   Confirm with **[ENTER]**.

```
ON   SU→00:00
OFF  SU 00:59
Tset 65°C
PUMP ON          SAVE
```

   The cursor moves to the hour digits, which will blink.
3. Use **[↑]** and **[↓]** to set the hours. In the example, this is 08.
   Confirm with **[ENTER]**.
   The cursor moves to the minute digits, which will blink.

```
ON   SU 08→00
OFF  SU 08:00
Tset 65°C
PUMP ON          SAVE
```

Note
Because the switch-off time can never be earlier than the switch-on time, the switch-off time setting is automatically adjusted with the switch-on time.

4. Use **[🡅]** and **[🡇]** to set the minutes. In the example, this is 15.
Confirm with **[ENTER]**.
The cursor moves to the switch-off hour digits, which will blink.

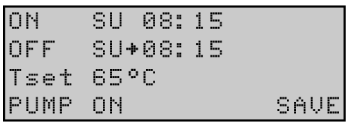

4.3.6.2 Week program: setting the switch-off time

1. Use **[🡅]** and **[🡇]** to set the hours. In the example, this is 12.
Confirm with **[ENTER]**.
The cursor moves to the minute digits, which will blink.

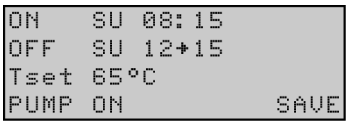

2. Use **[🡅]** and **[🡇]** to set the minutes. In the example, this is 45.
Confirm with **[ENTER]**.
The cursor moves to the desired water temperature.

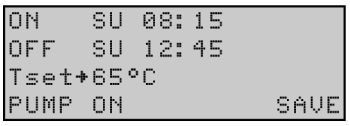

4.3.6.3 Week program: setting the water temperature

1. Use **[🡅]** and **[🡇]** to set the water temperature. In the example this is 75°C.
Confirm with **[ENTER]**.
The cursor moves to PUMP ON

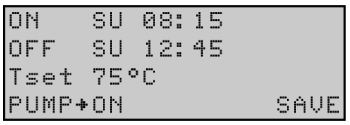

4.3.6.4 Week program: setting the program-controlled pump

1. If required, a pump can be controlled during the period. Use **[🡅]** and **[🡇]** to set PUMP ON. The pump ensures a regular circulation of hot water in the hot water pipes. You can skip this step if you there is no pump in your hot water circuit.
Confirm with **[ENTER]**.
The cursor moves to SAVE.

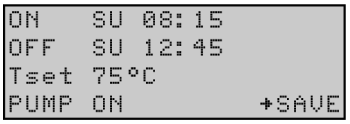

2. Confirm with **[ENTER]**.
The display shown in the figure will appear.

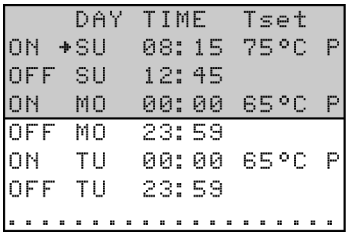

3. If you wish, you can use **[🡇]** to scroll to another day, and change more switch-on (see section 4.3.6.1) and switch-off (see section 4.3.6.2) times.

4. After changing all desired switch-on and switch off times, you can start running the week program:
   Scroll with **[🡻]** to START OPERATION.
   Confirm with **[ENTER]**.

4.3.7 Adding times to a week program

Call up the menu to INSERT switch-on and switch-off times into a week program as follows:

1. **[🕮]**: WEEK PROGRAM | PROGRAM OVERVIEW.
   Confirm with **[ENTER]**.

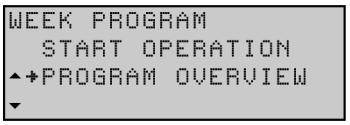

   The display shows the menu for the week program. The cursor points to the active period.

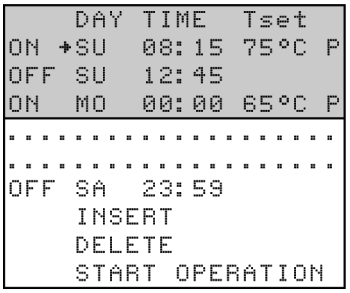

2. Scroll **[🡻]** to INSERT.
   Confirm with **[ENTER]**.
   The submenu for adding a period will appear.

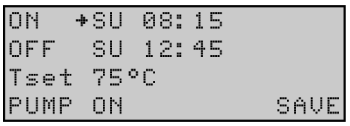

Example
As an example, we will program an extra period in which the switch-on time is set to 18:00 and the corresponding switch-off time to 22:00. The water temperature will be set to 75ºC and the pump will run continuously.

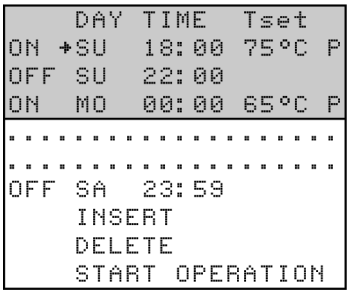

3. Proceed as follows:
   a. Set the switch-on time (see section 4.3.6.1).
   b. Set the switch-off time (see section 4.3.6.2).
   c. Set the water temperature (see section 4.3.6.3).
   d. Set the program-controlled pump (see section 4.3.6.4).
4. To activate the week program with the new period added, scroll down with **[🡻]** to START OPERATION and confirm with **[ENTER]**.

4.3.8 Deleting times from a week program

All switch-on/off times are shown sequentially in the display. Assume that the switch-on/off times for the water heater are programmed as in the figure.

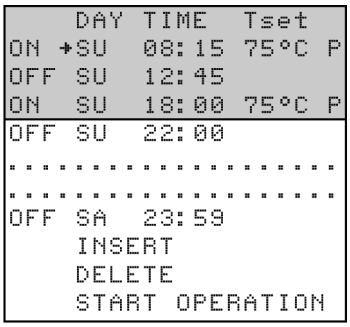

To delete a period, proceed as follows:

1. **[⌓]**: WEEK PROGRAM | PROGRAM OVERVIEW.
   Confirm with **[ENTER]**.

2. Scroll with **[🡻]** to PROGRAM OVERVIEW.
   Confirm with **[ENTER]**.

   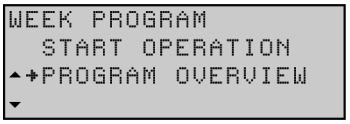

   The display shows the menu for the week program.

3. Scroll with **[🡻]** to DELETE.
   Confirm with **[ENTER]**.
   To warn you that you are now working in the delete sub-menu, the cursor is replaced with an exclamation mark (!) and the period settings will blink.

   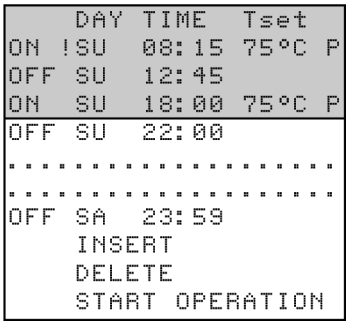

4. Scroll with **[🡻]** to the day to be deleted. For example, SU (Sunday) in the second period. See the figure.
   Confirm with **[ENTER]**.

   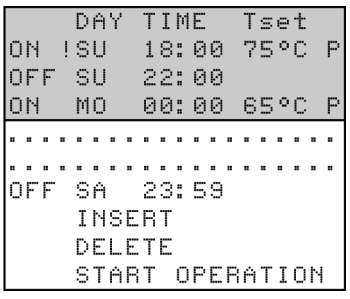

5. The lines showing switch-on/off times are replaced by the text DELETE BLOCK?. See the figure.
   Confirm with **[ENTER]**.
   (or use **[RESET]** to cancel).

   The switching period has been deleted. You will return now to the week program menu. The cursor points to the first programmed period.

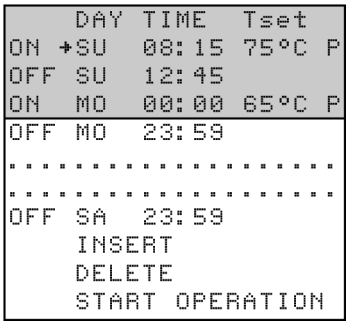

6. Scroll with **[↓]** to START OPERATION.
   Confirm with **[ENTER]**.
   The week program is active.

4.3.9 Extra period

Use an extra period when you either want to have the water heater switch on and off for a certain period, either without modifying the active week program, or without taking the water heater out of **OFF mode** (frost

protection active).

If the water heater is running under an "extra period", then this is indicated in the display with the text EXTRA.

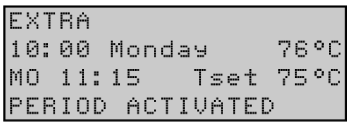

During the extra period, if the water temperature becomes too low, the water heater will run through the operating cycle (see section 4.1.1), then return to the extra period.

The same settings can be made for an extra period as for a week program (see section 4.3.6).

4.3.9.1 Programming an extra period

1. Call up the menu for entering an extra period via:
2. **[⌓]**:: EXTRA PERIOD
   Confirm with **[ENTER]**.

   The display show the settings for the extra period.

Setting the switch-on time

3. Use **[🡅]** and **[🡇]** to set the day. In the example this is SU.
   Confirm with **[ENTER]**.
   The cursor moves to the hour digits, which will blink.

```
ON   SU→00:00  EXTRA
OFF  SU 00:59
Tset 65°C
PUMP ON        START
```

4. Use **[🡅]** and **[🡇]** to set the switch-on hour to the desired value. In the example, this is 08.
   Confirm with **[ENTER]**.
   The cursor moves to the minute digits, which will blink.

```
ON   SU 08→00  EXTRA
OFF  SU 08:00
Tset 65°C
PUMP ON        START
```

Note
Because the switch-off time can never be earlier than the switch-on time, the switch-off time setting is automatically adjusted with the switch-on time.

5. Use **[🡅]** and **[🡇]** to set the minutes. In the example, this is 15. Confirm with **[ENTER]**.
   The cursor moves to the hour digits of the switch-off period.

```
ON   SU 08:15  EXTRA
OFF  SU→08:15
Tset 65°C
PUMP ON        START
```

Setting the switch-off time

6. Use **[🡅]** and **[🡇]** to set the hours. In the example, this is 012.
   Confirm with **[ENTER]**.
   The cursor moves to the minute digits, which will blink.

```
ON   SU 08:15  EXTRA
OFF  SU 12→15
Tset 65°C
PUMP ON        START
```

7. Use **[🡅]** and **[🡇]** to set the minutes.In the example, this is 45.
   Confirm with **[ENTER]**.
   The cursor moves to the water temperature. See the figure

```
ON   SU 08:15  EXTRA
OFF  SU 12:45
Tset→65°C
PUMP ON        START
```

Setting the water temperature

8. Use **[🡅]** and **[🡇]** to set the water temperature. In the example this is 75°C.
   Confirm with **[ENTER]**.
   The cursor moves to PUMP ON

```
ON   SU 08:15  EXTRA
OFF  SU 12:45
Tset 75°C
PUMP→ON        START
```

Setting the program-controlled pump

9. If required, a pump can be controlled during the period. Use **[↑]** and **[↓]** to set PUMP ON. The pump ensures a regular circulation of hot water in the hot water pipes. You can skip this step if you there is no pump in your hot water circuit.
   Confirm with **[ENTER]**.
   The cursor moves to START.

```
ON   SU 08:15  EXTRA
OFF  SU 12:45
Tset 75°C
PUMP ON       →START
```

10. Confirm with **[ENTER]**.

The extra period has been programmed.

Note
Once the extra period has completed running, the controller returns to the mode **ON**, **OFF** or **WEEK PROGRAM**. The following week, the extra period will NOT be automatically switched back on.

4.3.10 Settings

Using the option SETTINGS you can adjust certain settings, and display certain water heater specifications:

- Adjustable settings
  - Menu language.
  - Current day of week and time.
- Displayable water heater specifications, this category is only relevant to the installation engineer and/or service and maintenance engineer
  - Regulation interval (water temperature).
  - Ignition speed of fan.
  - Working speed of fan.

4.3.10.1 Setting menu language

To set menu language:

```
MENU
  WEEK PROGRAM
▲ EXTRA PERIOD
▼→SETTINGS
```

1. Call up the menu for selecting the language as follows:
2. **[⌓]**: SETTINGS.
   Confirm with **[ENTER]**.
   The display shows the menu for settings.

```
SETTINGS
    →LANGUAGE
▲    DAY/TIME
▼    SPECIFICATIONS
```

3. The cursor is positioned beside LANGUAGE.
   Confirm with **[ENTER]**.
   The display shows the language selection menu.

```
LANG
    ENGLISH
▲   NEDERLANDS
▼  →DEUTSCH
    FRANCAIS
    ITALIANO
    CZECH
    ESPANOL
```

4. Scroll with **[↓]** to the desired language.
   Confirm with **[ENTER]**.

The language is set.

4.3.10.2 Setting day and time

To enter the time and day:

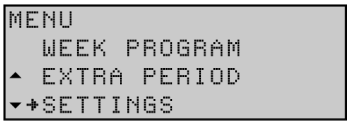

1. Call up the menu for entering the day and time as follows:
2. **[🛏]**: SETTINGS.
   Confirm with **[ENTER]**.
   The display shows the menu for settings.
3. Scroll with **[↑]** and **[↓]** to DAY/TIME.
   Confirm with **[ENTER]**.

The display shows the sub-menu for adjusting the day.

4. The cursor is positioned beside Sunday.
   Scroll with **[↑]** and **[↓]** to the desired day.
   Confirm with **[ENTER]**.
   The day has been set. The display shows the submenu for adjusting the time.

5. The cursor moves to the hour digits, which will blink.
   Scroll with **[↑]** and **[↓]** to the current hour, for example 15.
   Confirm with **[ENTER]**.

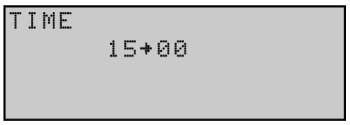

6. The cursor moves to the minute digits, which will blink.
   Scroll with **[↑]** and **[↓]** to the next minute, for example 45.
   Confirm the minute setting with **[ENTER]**.

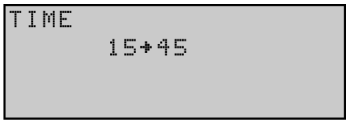

The time has been set.

Note
The water heater takes no account of daylight saving.

4.3.10.3 Displaying water heater specifications

Note
This category is solely intended for the installation engineer and/or service and maintenance engineer.

The corrected data is shown in the table of general and electrical data (see section 12.1).

Call up the menu to display the water heater specifications as follows:

1. **[⌂]**: SETTINGS.
   Confirm with **[ENTER]**.

```
MENU
  WEEK PROGRAM
▲ EXTRA PERIOD
▼+SETTINGS
```

2. Scroll with **[▼]** to SPECIFICATIONS.
   Confirm with **[ENTER]**.

```
SETTINGS
  LANGUAGE
▲ DAY/TIME
▼+SPECIFICATIONS
```

   The display shows the sub-menu for displaying water heater specifications.

```
SPECIFICATIONS
 +REGULATIONINTERVAL
▲ IGNITION SPEED
▼ WORKING SPEED
```

3. Scroll with **[▼]** to the section to be displayed, for example REGULATION INTERVAL.
   The corresponding display appears

```
REGULATION INTERVAL

    40-80°C
```

Installation, Maintenance and Service part

5 Introduction

5.1 About the water heater

The ECH water heater is intended for heating water for sanitary purposes.

The ECH is a condensing gas–fired storage water heater with a fan in the air intake. The flue gasses transfer their heat to the water through an efficient heat exchanger. The water heater has a concentric venting connector and can function as an open or as a room-sealed water heater.

5.2 The appliance's heating cycle

The appliance's heating cycle is activated when the measured water temperature (T_1) falls below the threshold value (T_{set}). This threshold value depends on the currently selected appliance operating mode. For example, if the appliance is in **OFF mode** (frost protection), then this value is 5°C. If the appliance is in **ON mode**, this threshold value is adjustable, for example to 65°C.

The heating cycle runs successively through the following states:

- HEAT DEMAND;
- PRE-PURGE;
- PRESSURE SWITCH;
- PRE-GLOW;
- IGNITION;
- RUNNING;
- POST-PURGE.

5.3 Working principle

The water heater is fitted with a modulating premix burner system with 1:1 gas-to-air ratio regulation. The air required for combustion is delivered by the fan (18). The gas is supplied via the gas control valve (16) and the venturi (30) on the intake side of the fan. The 1:1 gas-to-air ratio always guarantees the most efficient gas/air mixture.

In this water heater, the cold water enters the bottom of the tank through the cold water inlet (14). The tap water, heated by the combustion chamber (8) and heat exchanger (11), leaves the tank through the hot water outlet (2). Once the water heater is completely filled with water, it will constantly be under mains water pressure. As hot water is drawn from the water heater, cold water is immediately added.

The special design of the heat exchanger (11) ensures that the flue gases are first led downwards via the combustion chamber, then upwards via the heat exchanger, and downwards again alongside the water in the tank. The flue gases gradually become cooler in the process. Because the cooled flue gases flow alongside the cold water lower down in the tank, they start to condense. This condensation causes latent heat energy to be transferred to the cooler water, thereby increasing the performance of the unit. The condensate yielded by this process is discharged via the condense trap (23).

The insulation layer (24) prevents heat loss. The inside of the tank is enamelled to protect against corrosion. The anodes (9) provide extra protection against corrosion.

The water heater has an inspection and cleaning opening (12) for maintenance.

Fig. Water heater ECH 32-220, 33-370, 52-370, 63-370

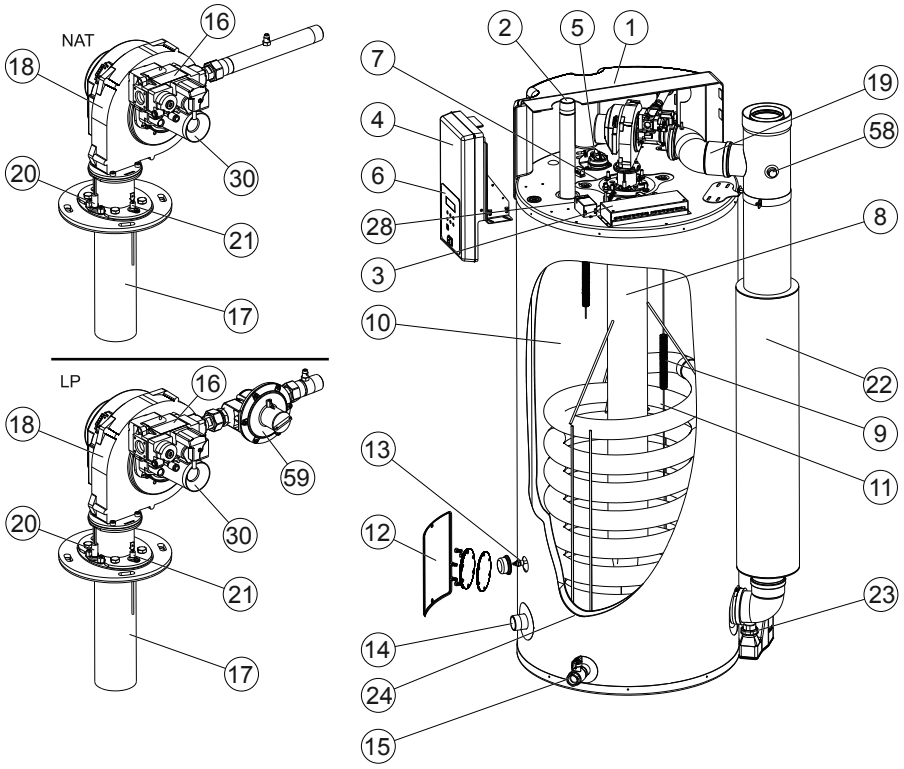

Fig. Water heater ECH 87-480, 106-480, 129-480

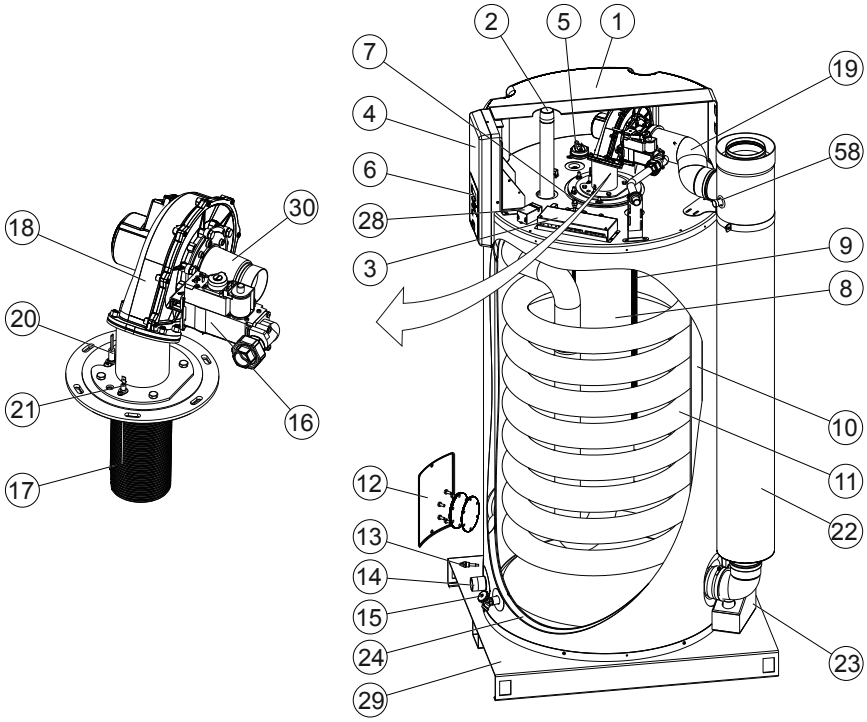

1. Cover
2. Hot water outlet
3. Electrical connector block
4. Controller
5. Pressure switch
6. Control panel
7. Temperature sensor T_1
8. Combustion chamber
9. Anode
10. Tank
11. Heat exchanger
12. Inspection and cleaning opening
13. Temperature sensor T_2
14. Cold water inlet
15. Drain valve
16. Gas control valve
17. Burner
18. Fan
19. Air supply hose
20. Hot surface igniter
21. Flame probe
22. Chimney pipe
23. Condens trap
24. Insulation layer
28. Potentiostat
29. Base
30. Venturi
58. Flue gas test point
59. Pressure-reducing valve

5.4 Operating cycle

The temperature sensor T_1 (7) measures the water temperature at the top of the water heater (T_{top}). This temperature is sent to the controller. As soon as T_1 is lower than the set water temperature (T_{set}), the controller registers a "heat demand". The fan (18) starts running and the gas control valve (16) is opened. The fan runs at full speed and the gas is mixed with the air in the venturi (30). This mixture is ignited by the hot surface igniter (20) and the water becomes heated. As soon as the water temperature approaches T_{set} the fan rpm drops to the partial load speed (this is also referred to as modulating). Once T_1 rises above T_{set}, the heat demand ends and the controller stops the operating cycle. When responding to both the start and end of the heat demand, the controller assumes a certain margin. We refer to this margin as the hysteresis (see section 9.2.1).

6 Safety

6.1 Safety instructions

For safety instructions about the use of the water heater, refer to Safety (see section 2) in the User part of this manual.

Warning
Installation, maintenance and service must be carried out by a qualified engineer in compliance with the general and local regulations imposed by the gas, water and power supply companies and the fire brigade. The appliance may only be installed in a room that complies with the requirements stated in national and local ventilation regulations.

Warning
Leave the water heater electrically isolated until you are ready to commission it.

Caution
The water heater may only be manoeuvred in an upright position. After unpacking, make sure that the water heater is not damaged.

Caution
Use of an incorrect roof or wall-mounted flue terminal can cause the water heater to malfunction.

Caution
During installation, obey the instructions delivered with the sets of air supply components and the flue gas discharge components. Make sure that the venting system does not exceed the maximum number of 45º and 90º bends and the maximum pipe length.

Caution
Make sure that the diameter and length of the gas supply pipe are large enough to supply sufficient capacity to the water heater.

Caution
Make sure that the condensate drain is connected to the waste water discharge using an open connection.

Caution
Fill the water heater completely before use. Dry firing will damage the water heater.

Caution
After installation, maintenance or service, you must always check that the appliance is gas tight and make sure that the gas supply pressure, the CO_2 value and the air pressure differential are correct.
If the gas supply pressure is not correct, contact your mains gas supply company. Do not use the water heater.

Caution
To prevent that you damage the components of the water heater, make sure that it is completely stopped operation before you turn off the water heater (see section 4.2). Wait 1 minute after you switch the water heater to **OFF mode**, before you switch the control switch to **0.**

Caution
The anode protection remains active when the water heater is in **OFF mode** and the control switch is set to **0**.

Note
Any leakage from the tank and/or connections can cause damage to the immediate environment or floors below the level of the boiler room. Install the water heater above a waste water drain or in a suitable metal leak tray.
The leak tray must have an appropriate waste water drain and must be at least 5 cm deep with a length and width at least 5 cm greater than the water heater.

6.2 Instructions on the water heater

The water heater has some safety instructions on its cover:

- The text "Read the installation instructions before installing the appliance".
- The text "Read the user instructions before putting the appliance into operation".

Also the packaging has some safety instructions:

- The text "Read the installation instructions before installing the appliance".
- The text "Read the user instructions before putting the appliance into operation".
- The text "The appliance may only be installed in a room that meets the required ventilation regulations".
- Some safety pictograms:

	CE approved
	this way up
	fragile
	keep dry
	maximum stacking height is 1
	maximum stacking height is 1

6.3 Safety devices

6.3.1 Protection for the water heater

6.3.1.1 Water temperature protection

Using temperature sensors T_1 (7) and T_2 (13), the controller monitors three temperatures that are important for safety. The table explains the functioning of the temperature sensors.

Safety	Description
Anti-frost (T_1 < 5 ºC or T_2 < 5 ºC)	The frost protection cuts in. The water is heated to 20 °C.
Maximum water temperature: (T_1 > 88 ºC or T_2 > 88 ºC)	The high-limit safeguard serves to prevent overheating and/or excessive formation of scale in the appliance. If the high-limit safeguard is activated, heating is stopped. This causes the water in the tank to cool down. Once the water has cooled sufficiently (T_1 < 81°C), the controller resets the appliance.
For extra safety (T_1 > 93 ºC or T_2 > 93 ºC)	A lockout error of the water heater controller takes place. (see section 11) The controller must be manually reset before the appliance can resume operation. The reset may only be performed if T_1 < 81°C.

6.3.1.2 Gas control valve

The controller opens the gas control valve so that gas can be supplied to the burner. As a safety measure, the gas control valve has two valves. Both valves shut off the gas supply.

6.3.1.3 Fan

The fan (18) provides an optimum air supply when there is a heat demand. As a safety feature, the fan ensures that any gases present in the combustion chamber are removed, both before and after combustion. We refer to this as pre- and post-purge.

The fan speed is continuously monitored by the controller (4). The controller takes control if the fan rpm varies too much from the value set.

6.3.1.4 Pressure switch

The pressure switch only guarantees the supply of air during pre-purging of the water heater. If the pressure difference during pre-purging is sufficient, the pressure switch closes. Refer to the general and electric specifications in the appendices (see section 12) for the trip point for each water heater.

Note
The trip point of the pressure switch is not adjustable.

6.3.1.5 Flame probe

To ensure that no gas can flow when there is no combustion, the water heater is fitted with a flame probe (21). The controller uses this probe to detect the presence of a flame, by means of ionisation detection. The controller closes the gas control valve the instant it detects that there is a gas flow but no flame.

6.3.2 Safety of the installation

Excessive pressure in the tank can damage the enamelled layer (in the water heater) or the tank itself. An inlet combination and pressure-reducing valve prevents this. The inlet combination acts as a stop valve, non-return valve and overflow valve. If the water mains pressure is too high, a pressure-reducing valve must be used (Refer to the general and electric specifications in the appendices (see section 12)). Both components must be fitted in the cold water inlet (see section 7.4.2).

The use of an expansion vessel, expansion valve and/or pressure reducing valve depends on the type of installation: unvented or vented.

6.3.2.1 Unvented installation

With an unvented installation, an expansion valve and expansion vessel prevent the buildup of excessive pressure in the tank. This prevents damage being caused to the enamel coating (in the water heater) or to the tank. A non-return valve prevents excessive pressure build-up in the water supply system. This valve also prevents water from flowing backwards from the tank into the cold water supply system. The pressure-reducing valve protects the water heater against excess mains water pressure, refer to the general and electric specifications in the appendices (see section 12). These components are installed in the cold water inlet (see section 7.4.2).

6.3.2.2 Vented installation

With a vented installation, excess pressure is taken up by the open cold water head tank. The level of the cold water head tank determines the maximum working pressure in the tank, refer to the general and electric specifications in the appendices (see section 12). The water heater must also be fitted with a vent pipe from the hot water pipe, which opens into the cold water head tank.

Ideally, the vent pipe should discharge into a separate discharge channel/drain or otherwise to the open cold water head tank. The water heater should also be fitted with a stop valve (see section 7.4.1.2) on the hot water side.

6.3.2.3 T&P valve

A T&P valve is only mandatory in unvented installations. However, Lochinvar also recommends the use of a T&P valve in vented installations.

A T&P (Temperature and Pressure Relief) valve monitors the pressure in the tank and the water temperature at the top of the tank. If the pressure in the tank becomes too high the valve will open, refer to the general and electric specifications in the appendices (see section 12). The hot water can now flow out of the tank. Because the water heater is under water supply pressure, cold water will automatically flow into the tank. The valve remains open until the unsafe situation has been rectified. The water heater is fitted standard with a connection for a T&P valve (see section 7.4.1.2).

6.4 Environmental aspects

6.4.1 Recycling

The packaging material is environmentally friendly, recyclable and relatively easy to discard.

6.4.2 Disposal

Old end-of-life appliances contain materials that need to be recycled. When you discard devices at the end of their service life, you must obey local legislation related to waste disposal.

Never discard your old device together with regular waste. Put the device into a municipal waste collection depot for electrical and electronic equipment. If necessary, ask your supplier or your service and maintenance engineer for advice.

7 Installation

Warning
The installation must be done by a qualified person, in compliance with general and local applicable regulations.

Caution
The water heater may not be used in rooms where chemical substances are stored or used because of the risk of explosion and corrosion of the water heater. Some propellants, bleaching agents and degreasing agents etc. disperse of explosive vapors and/or cause accelerated corrosion. If the water heater is used in a room where such substances are stored or used, the warranty will be void.

For more safety instructions, refer to Safety instructions (see section 6.1).

7.1 Packaging

Lochinvar recommends to unpack the water heater at or near its intended location. Remove the packaging material carefully to prevent damage to the water heater.

7.2 Conditions

The water heater is suitable for room-sealed and for open combustion:

- For room-sealed combustion, the air inlet does not depend on the installation site.
- For open combustion, you must comply with the local applicable directives and ventilation regulations for open water heaters.

7.2.1 Ambient conditions

The installation site must be frost-free. If necessary, adjust the installation site to keep it frost-free.

Make sure that the ambient conditions are correct to prevent malfunction of the electronics in the water heater.

Air humidity and ambient temperature	
Air humidity	Max. 93% RH at + 25 ºC
Ambient temperature	Functionality: 0 ≤ T ≤ 60 ºC

7.2.2 Maximum floor load

Refer to the general and electric specifications in the appendices (see section 12) to make sure that the maximum floor load is sufficient for the weight of the water heater.

7.2.3 Water composition

The water must comply with the regulations for drinking water for human consumption.

Water composition	
Hardness (alkaline earth ions)	> 1.00 mmol/l: • German hardness > 5.6° dH • French hardness > 10.0° fH • English hardness > 7.0° eH • $CaCO_3$ > 100 mg/l
Conductivity	> 125 µS/cm
Acidity (pH value)	7.0 < pH value < 9.5

Note
If the water specifications differ from the specifications in the table, the tank protection cannot be guaranteed, refer to Warranty.

7.2.4 Working clearances

For access to the water heater, it is recommended that the following clearances are observed (see figure):

- AA: around the water heater's control column and cleaning openings: 100 cm.
- BB: all sides of the water heater: 50 cm.
- Top of the water heater: 100 cm.

Fig. Working clearances
ECH 32-220 - 63-370

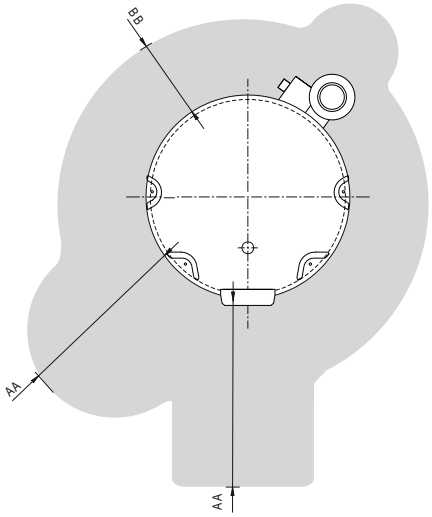

Fig. Working clearances
ECH 87-480 - 129-480

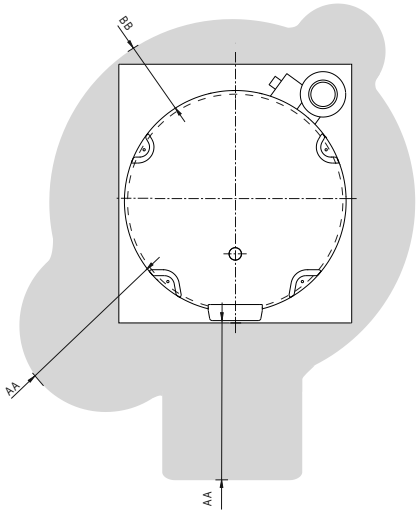

Note
When installing the water heater, be aware that any leakage from the tank and/or connections can cause damage to the immediate environment or floors below the level of the boiler room. If this is the case, the water heater should be installed above a waste water drain or in a suitable metal leak tray.

Note
The leak tray must have an appropriate waste water drain and must be at least 5 cm deep with a length and width at least 5 cm greater than the diameter of the water heater.

7.3 Installation diagram

Fig. Installation diagram

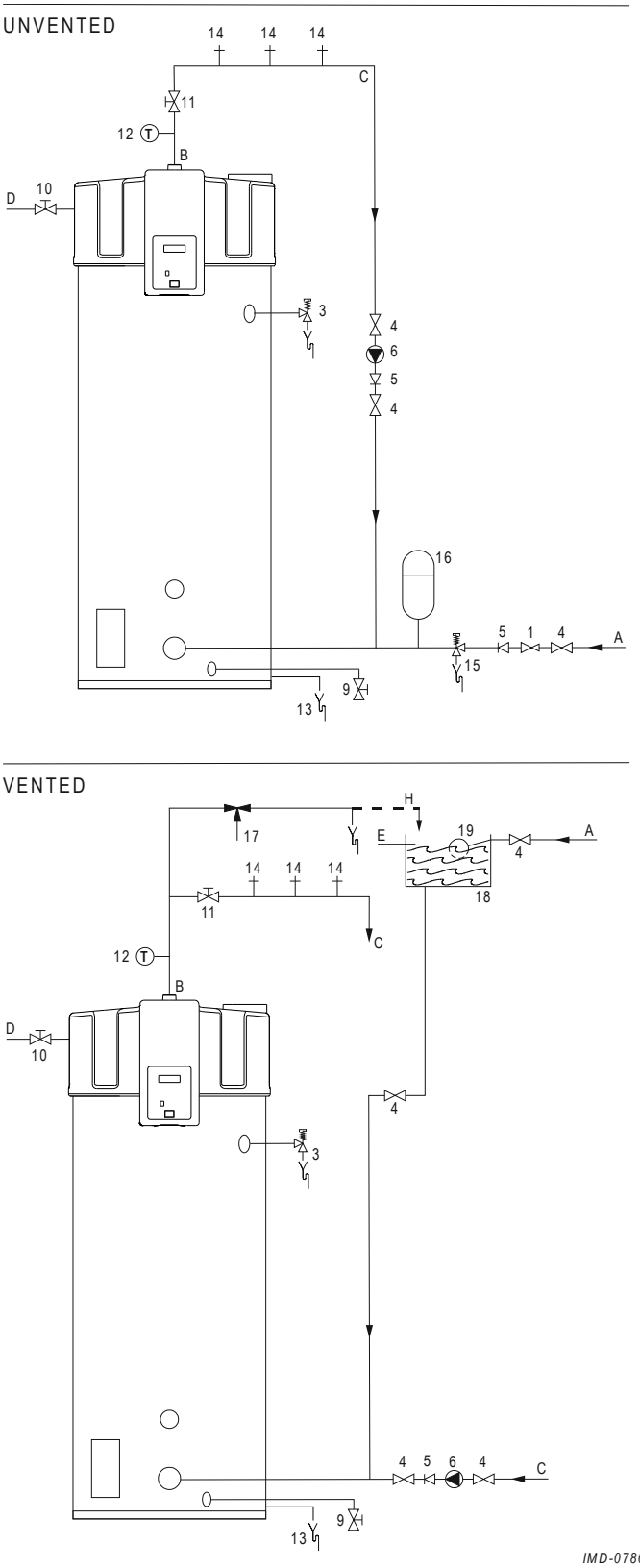

1. Pressure reducing valve (mandatory if the mains water pressure is too high)
3. T&P valve
4. Stop valve (recommended)
5. Non-return valve (mandatory)
6. Circulation pump (optional)
9. Drain valve
10. Manual gas valve (mandatory)
11. Service stop valve
12. Temperature gauge (optional)
13. Condensate drain
14. Draw-off points
15. Expansion valve (mandatory)
16. Expansion vessel (mandatory)
17. 3-way aeration valve (recommended)
18. Cold water head tank
19. Float switch

A. Cold water supply
B. Hot water outlet
C. Circulation pipe
D. Gas supply
E. Overflow pipe
H. Overflow protection

Note
Use this installation diagram when you:

- install the water connections (see section 7.4)
- install the condensate drain (see section 7.4.1.4)
- install the gas connection (see section 7.5)
- fill the water heater (see section 7.8.1)
- drain the water heater (see section 7.9.2)

7.4 Water connections

7.4.1 Unvented water connections

Warning
The installation should be carried out by a competent person, in compliance with general and locally applicable regulations.

7.4.1.1 Cold water side

See (A) in the installation diagram.

1. Fit an approved stop valve (4) on the cold water side as required by the applicable regulations.
2. The maximum working pressure of the water heater is 8 bar. Because the pressure in the water pipe at times can exceed 8 bar, you must fit an approved pressure-reducing valve (1).
3. Fit a non-return valve (5) and an expansion vessel (16).
4. Fit an expansion valve (15) and connect the overflow side to an open waste water pipe.

7.4.1.2 Hot water side

See (B) in the installation diagram.

Note
Insulating long hot water pipes prevents unnecessary energy loss.

1. Optional: fit a temperature gauge (12) so you can check the temperature of the tap water.
2. Fit the T&P valve (3).
3. Fit a stop valve (11) in the hot water outlet pipe for servicing.

7.4.1.3 Circulation pipe

See (C) in the installation diagram.

If an immediate flow of hot water is required at draw-off points, a circulation pump can be installed. This improves comfort, and reduces water wastage.

1. Fit a circulation pump (6) of the correct capacity for the length and resistance of the circulation system.
2. Fit a non-return valve (5) after the circulation pump to guarantee the direction of circulation.
3. Fit two stop valves for servicing (4).
4. Connect the circulation pipe according to the installation diagram.

7.4.1.4 Condensation drain

1. Fit a sloping waste water pipe to the condens trap (13) for condensation drainage and connect this via an open connection to the waste water discharge.

Caution
If the condensation drain is not fitted to the waste water discharge using an open connection, this can cause faults.

7.4.2 Vented water connections

Warning
The installation should be carried out by a competent person, in compliance with general and locally applicable regulations.

7.4.2.1 Cold water side

See (A) in the installation diagram.

1. Fit an approved stop valve (4) on the cold water side between the cold water head tank (18) and the water heater, as required by applicable regulations.

7.4.2.2 Hot water side

See (B) in the installation diagram (see section 7.3).

Note
Insulating long hot water pipes prevents unnecessary energy loss.

1. Fit the T&P valve (3).
2. Optional: fit a temperature gauge (12) so you can check the temperature of the tap water.
3. Fit a stop valve (4) in the hot water outlet pipe for servicing.
4. If a circulation pipe is required, continue by installing the circulation pipe (see section 7.4.1.3).

7.4.2.3 Circulation pipe

See (C) in the installation diagram.

If an immediate flow of hot water is required at draw-off points, a circulation pump can be installed. This improves comfort, and reduces water wastage.

1. Fit a circulation pump (6) of the correct capacity for the length and resistance of the circulation system.
2. Fit a non-return valve (5) after the circulation pump to guarantee the direction of circulation.
3. Fit two stop valves for servicing (4).
4. Connect the circulation pipe according to the installation diagram.

7.4.2.4 Condensation drain

1. Fit a sloping waste water pipe to the condens trap (13) for condensation drainage and connect this via an open connection to the waste water discharge.

Caution
If the condensation drain is not fitted to the waste water discharge using an open connection, this can cause faults.

7.5 Gas connection

Caution
Make sure that the gas supply pipe has the correct diameter and length to supply sufficient capacity to the water heater.

Caution
Make sure that the gas supply pipe is clean. Contamination in the pipe can cause damage to the gas control valve, during operation.

Caution
Install the manual gas valve on a spot accessible for the user.

Install the gas connection:

1. Install a manual gas valve (10) in the gas supply pipe.
2. Make sure that the gas pipe is clean before use. If necessary, remove the contamination from the pipe.
3. Close the manual gas valve.
4. Install the gas supply pipe to the gas control valve.
5. Make sure that there are no gas leaks.

7.6 Venting system

There are several alternatives for installation of the air inlet and flue gas outlet:

Installation type	Version	Description
B23	Open	Air for combustion is drawn from installation room and the flue gasses leave the water heater via a vertical roof terminal.
C13	Closed	Concentric and/or parallel venting system, with horizontal air inlet and flue gas outlet, in same pressure zone.
C33	Closed	Concentric and/or parallel venting system, with vertical air inlet and flue gas outlet, in same pressure zone.
C43	Closed	Water heaters on common air inlet and flue gas outlet (concentric and/or parallel) in a multiple floor building.
C53	Closed	Separate air inlet and flue gas outlet terminal types mixed. Air inlet and flue gas outlet termination may be in different pressure zone.
C63	Closed	Water heaters supplied without venting materials. These water heaters must be installed in compliance with local regulations. The water heater is intended to be connected to a separately approved and marketed venting system.

This manual does not discus installation type B23. When you need a B23 system, contact Lochinvar for more information.

Caution
Always make sure that the flue gas outlet discharges into an area approved for the correct type of installation.

Caution
The use of a different wall or roof terminal can result in incorrect functioning of the water heater. Use the part number from the table to order a terminal set from your supplier or the manufacturer.

Fig. Venting systems

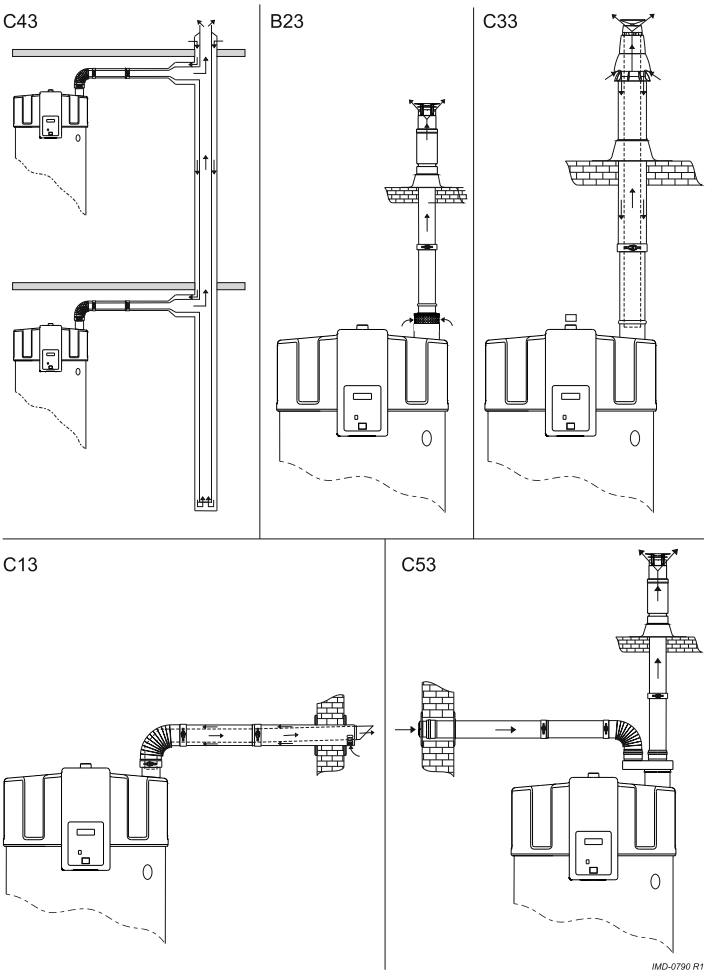

7.6.1 C13/C33 concentric systems

Use a wall terminal set or a roof terminal set to install a C13 or a C33 concentric venting system.

Description Concentric Venting material	**ECH 32-220 - 63-370**	**ECH 87-480 - 129-480**
Manufacture venting material	Muelink & Grol	Muelink & Grol
Construction	Concentric	Concentric
Material flue gas outlet	Thick walled aluminum	Thick walled aluminum
Material air inlet	Thin walled galvanized steel	Thin walled galvanized steel
Diameter flue gas outlet	100 mm	130 mm
Diameter air inlet	150 mm	200 mm
Description parts	**Lochinvar Part number**	**Lochinvar Part number**
Wall terminal set A wall terminal (1), a 500 mm concentric pipe and a 90° bend	LV302504	LV311465
Wall terminal (1)	LV302505	LV302313
Roof terminal set A roof terminal (2), a 500 mm concentric pipe and a roof plate	LV311463	LV311464
Roof terminal (2)	LV311458	LV306390
Concentric pipe 500 mm	LV302499	LV302301
Concentric pipe 1000 mm	LV311450	LV311452
Concentric pipe 1500 mm	LV311451	LV311453
Concentric bend 45°	LV311454	LV311455
Concentric bend 90°	LV302502	LV311456

1 - supplied with wall flange and clamping ring

2 - supplied with clamping ring

Fig. Example concentric venting system

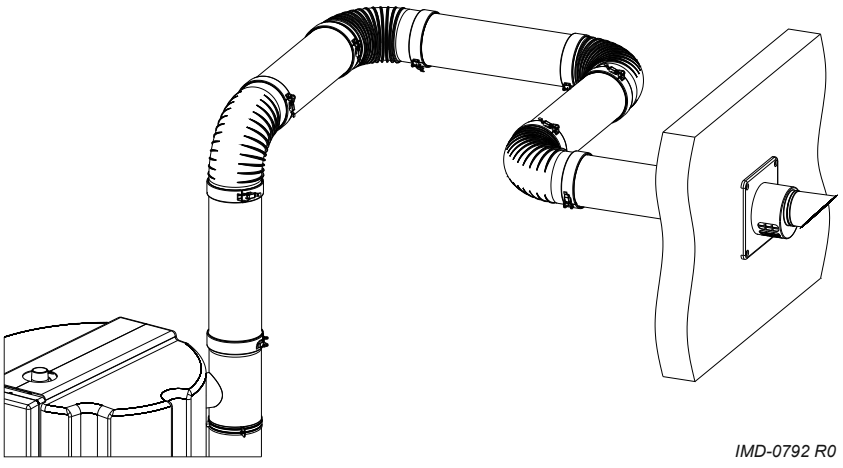

IMD-0792 R0

Caution
During installation, obey the instructions delivered with the sets of air supply components and the flue gas discharge components. Make sure that the venting system does not exceed the maximum number of 45º and 90º bends and the maximum pipe length.

Caution
Use a run-off of 50 mm per meter towards the water heater.

Refer to the table for the correct pipe dimensions of the C13 and C33 concentric systems.

Description	**Unit**	**ECH 32-220 - 63-370**	**ECH 87–480 - 129–480**
Diameter flue discharge/ air inlet	mm/mm	100/150	130/200
Maximum length	m	40	15
Maximum number of 45º and 90º bends	-	7	4

Caution
Both conditions stated in the table must be fulfilled.
Even if you use less than the stated maximum number of bends, the maximum pipe length still may not be exceeded.
Even if you use less than the stated maximum pipe length, the maximum number of bends still may not be exceeded.

7.6.2 C13/C33 parallel systems

Use a wall terminal set or a roof terminal set to install a C13 or a C33 parallel venting system.

Description Parallel Venting material	**ECH 32-220 - 63-370**	**ECH 87-480 - 129-480**
Manufacture venting material	Muelink & Grol	Muelink & Grol
Construction	Parallel	Parallel
Material flue gas outlet	Thick walled aluminum	Thick walled aluminum
Material air inlet		
Diameter flue gas outlet	100 $^{+0,6}/_{-0,6}$ mm	130 $^{+0,6}/_{-0,6}$ mm
Diameter air inlet		
Description parts	**Lochinvar Part number**	**Lochinvar Part number**
Wall terminal (1)	LV302505	LV302313
Roof terminal (2)	LV311458	0306390
Adapter box concentric to parallel - terminal side	LV307142	LV306801
Adapter box concentric to parallel - water heater side	LV304204	LV309605
Parallel pipe 500 mm	LV307160	LV306804
Parallel pipe 1000 mm	LV307161	LV306802
Parallel bend 45°	LV310197	LV308026
Parallel bend 90°	LV307164	LV306805

1 - supplied with wall flange and clamping ring
2 - supplied with clamping ring

Fig. Example parallel venting system

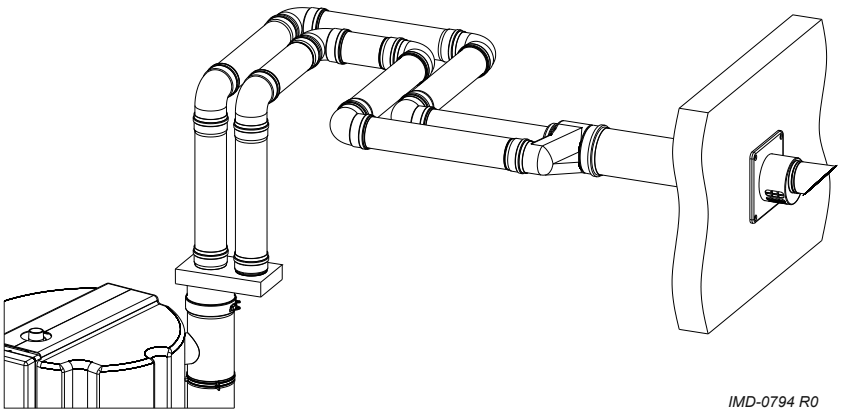

Refer to the table for the correct pipe dimensions of the C13 or a C33 parallel venting systems.

Description	**Unit**	**ECH 32-480 - 63-370(1)**	**ECH 87-480 - 129-480 (2)**
Default			
Diameter flue discharge/ air inlet	mm	2x100	2x130
Maximum length air inlet	m	55	65
Maximum length flue gas outlet	m	55	65
$L_{equivalent}$ 45°-bend	m	1,2	1,4
$L_{equivalent}$ 90°-bend	m	4,6	2,4
Diameter enlargement			
Diameter flue discharge/ air inlet	mm	2x130	2x150
Maximum length air inlet	m	100	100
Maximum length flue gas outlet	m	100	100
$L_{equivalent}$ 45°-bend	m	1,4	1,6
$L_{equivalent}$ 90°-bend	m	2,4	2,6

1 - When the maximum total length for the default diameter of 100 mm is insufficient, diameter 130 mm should be used. Any diameter enlargement must be carried out on both air inlet and flue gas outlet.

2 - When the maximum total length for the default diameter of 130 mm is insufficient, diameter 150 mm should be used. Any diameter enlargement must be carried out on both air inlet and flue gas outlet.

Caution
Always make sure the installation is in compliance with the requirements stated in this table.

Caution
Use a run-off of 50 mm per meter towards the water heater.

Calculate the maximum length of the air inlet and the flue gas outlet seperately:

1. Sum the lengths of the different pipe sections without bends. Ignore the length of the adaptor box.
2. Sum the lengths of the bends. Ignore the bend in the adapter box:
   - Sum $L_{equivalent}$ for each 45° bend.
   - Sum $L_{equivalent}$ for each 90° bend.
3. Sum the lengths of the pipe sections and the lengths of the bends to calculate the overall length of the air inlet and the flue gas outlet.
4. Adjust the length of the air inlet and/or the flue gas outlet when the overall length exceeds the maximum length as stated in the table.

7.6.3 C43/C53/C63 systems

The length of the air inlet and flue gas outlet is the same for C43, C53 and C63 systems as for C13 and C33 systems:

- Refer to C13/C33 concentric systems for the maximum pipe lengths of concentric systems.
- Refer to C13/C33 parallel systems for the maximum pipe lengths of parallel systems and non-concentric systems.

Note
Only use a C43 venting system when the common duct is a natural draught chimney. The common duct is part of the building, not a part of the system.

Note
In a C53 venting system the flue gas terminal must be CE approved and must comply to the EN 1856-1 requirements.

Note
Connect a C63 venting system to a separately approved and marketed system for the supply of combustion air and discharge of flue gasses.
The flue gas terminal must comply to the EN 1856-1 requirements. The maximum allowable recirculation rate is 10% under wind conditions.

Contact Lochinvar for more information and/or part numbers of the C43, C53 and C63 venting systems.

Concentric systems

Refer to the table for the correct pipe dimensions of the C43, C53 and C63 concentric systems.

Description	**ECH 32-220 - 63-370**	**ECH 87-480 - 129-480**
Manufacture venting material	Muelink & Grol	Muelink & Grol
Construction	Concentric	Concentric
Material flue gas outlet	Thick walled aluminum	Thick walled aluminum
Material air inlet	Thin walled galvanized steel	Thin walled galvanized steel
Diameter flue gas outlet	100 mm	130 mm
Diameter air inlet	150 mm	200 mm

Refer to C13/C33 concentric systems for the Lochinvar part numbers. The same parts can be used for the C43, C53 and C63 concentric systems.

Parallel and non-concentric systems

Refer to the table for the correct pipe dimensions of the C43, C53 and C63 parallel systems.

Description	**ECH 32-220 - 63-370-**	**ECH 87-480 - 129-480**
Manufacture venting material	Muelink & Grol	Muelink & Grol
Construction	Parallel	Parallel
Material flue gas outlet	Thick walled aluminum	Thick walled aluminum
Material air inlet		
Diameter flue gas outlet	100 $^{+0,6}/_{-0,6}$ mm	130 $^{+0,6}/_{-0,6}$ mm
Diameter air inlet		

Refer to C13/C33 parallel systems for the Lochinvar part numbers. The same parts can be used for the C43, C53 and C63 parallel systems.

Use the "adapter box concentric to parallel - water heater side" (part number LV312209) for C63 parallel systems.

7.7 Electrical connections

Warning
Leave the water heater electrically isolated until you are ready to commission it.

Caution
The water heater is phase-sensitive. It is absolutely essential to connect the mains live (L) to the live of the water heater and the mains neutral (N) to the neutral of the water heater.

Caution
There must be no potential difference between neutral (N) and earth (⏚). Use an isolating transformer (see section 7.7.3.1) in the supply circuit when there is a potential difference.

The figure shows a view of the terminal block, and the table explains the relevant connections.

Fig. Terminal block

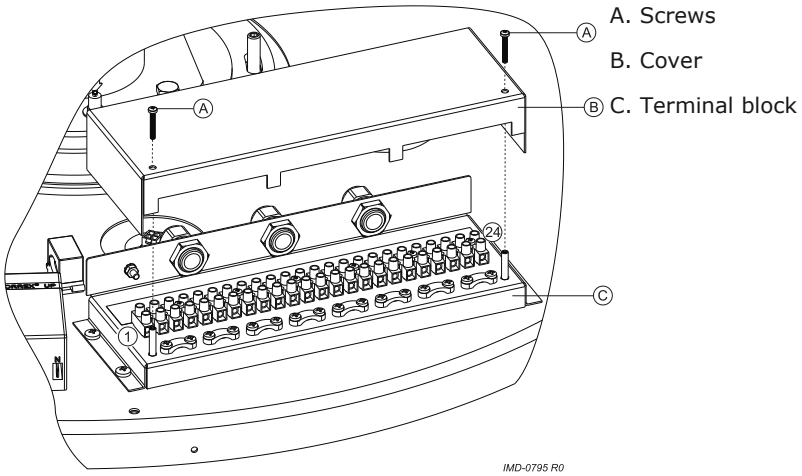

7.7.1 Preparation

In preparation, you must first remove the two covers, and the cover of the electrical section.

1. Undo the screws of the covers.
2. Carefully remove the covers from the water heater.
   The electrical section is now visible.
3. Loosen the 2 screws (A) and remove the cover (B) from the electrical section.
   The connector block (C) is now visible.

Note
Consult the table for the connections and consult the electrical diagram for the electrical component connections.

Mains voltage			**Isolating transformer**						**Alarm Out**			**Program controlled pump**				**External ON/OFF**		**BUS link**	
			Primary			**Secondary**													
N	L	⏚	N	L_1	⏚	N	L_2	⏚	X_1	X_2	⏚	N	L_3	⏚		X_3	X_4	X_5	X_6
1	2	3	4	5	6	7	8	9	10	11	12	13	14	15	16 to 20	21	22	23	24

7.7.2 Mains power

Note
The water heater is supplied without a power cable and isolator.
Use a power cable with cores of at least 3 x 1,0 mm^2 and a double-pole isolator with a contact gap of at least 3 mm.

Connect the water heater to the mains power supply:

1. Connect neutral (N), live (L) and earth (⏚) of the power cable to terminals 1 thru 3 of the terminal block as shown in the table (see section 7.7.1).
2. Fit the power cable in the strain relief.
3. Connect the power cable to the isolator.
4. If you have no more connections to make:
   - Fit the cover on the terminal block.
   - Fit the covers onto the water heater.

7.7.3 Optional electrical connections

Optionally, it is possible to:

- Connect an isolating transformer (see section 7.7.3.1).
- Connect a program-controlled pump (see section 7.7.3.2).
- Connect an external ON mode switch (see section 7.7.3.3).
- Connect an additional error signal (see section 7.7.3.4) to the water heater.

7.7.3.1 Isolating transformer

For more information about an isolating transformer, or to order an isolating transformer, please contact Lochinvar.

An isolating transformer should be used if there is a case of 'floating neutral'.

Note
The total power consumed by the appliance goes via the isolating transformer.

1. Refer to the fitting instructions provided with the isolating transformer. (Contact the supplier for details of the correct isolating transformer.)
2. Connect the neutral (N), live (L) and earth (⏚) of the power cables to terminals 4 through 9 of the connection block according to the table (see section 7.7.1).
3. Fit the cables in the strain relief.
4. If you have no more connections to make:
   - Fit the cover on the terminal block.
   - Fit the covers onto the water heater.
5. Connect the power cable to the isolator.

7.7.3.2 Program-controlled pump

Note
The maximum power capacity for a pump regulated by the controller is 100W.

1. Connect neutral (N), live (L) and earth (⏚) to terminals 13, 14 and 15 as indicated in the table (see section 7.7.1).
2. Fit the cable in the strain relief.
3. If you have no more connections to make:
   - Fit the cover on the terminal block.
   - Fit the covers onto the water heater.

7.7.3.3 External ON mode switch

External ON/OFF is an option for connecting an external ON/OFF switch. In the OFF position, the programmed operating mode is active. In the ON position, the programmed operating mode is overruled, and "ON mode" is active.

1. Connect leads (X3 and X4) to terminals 21 and 22 according to the table (see section 7.7.1).
2. Fit the cable in the strain relief.
3. If you have no more connections to make:
   - Fit the cover on the terminal block.
   - Fit the covers onto the water heater.

7.7.3.4 Additional error signal

The appliance has a relay terminal that is switched when an error is detected. This can be used to signal errors, for example with a bulb. A 230V circuit can be powered directly. Other voltages require a relay prescribed by the manufacturer.

1. Connect the phase cables (X1 and X2) to points 10 and 11 according to the table (see section 7.7.1). If required, connect earth (⏚) to terminal 12.
2. Fit the cable in the strain relief.
3. If you have no more connections to make:
   - Fit the cover on the terminal block.
   - Fit the covers onto the water heater.

7.8 Commissioning

To commission the water heater:

1. Fill the water heater (see section 7.8.1)
2. Check the supply pressure (see section 7.8.2)
3. Check the gas control valve pressure (see section 7.8.3)
4. Measure the CO_2 (see section 7.8.4)
5. Switch pressure measurement (see section 7.8.5)
6. Turn on the water heater (see section 7.8.6)

7.8.1 Filling

7.8.1.1 Filling unvented installations

Refer to the installation diagram when you fill the water heater:

1. Open the stop valve (11) in the hot water supply pipe.
2. If applicable, open the stop valves (4) of the circulation pipe (C).
3. Make sure that the drain valve (9) is closed.
4. Open the nearest hot water draw-off point (14).
5. Open the stop valve (4) of the cold water supply pipe (A). Cold water flows into the water heater.
6. Fill the water heater until a full water jet flows from the nearest draw-off point. The water heater is completely full.
7. Open all draw-off points to bleed the entire installation of air.
   The water heater is now under water supply pressure.
8. Make sure that no water comes out of the expansion valve (15) or the T&P valve (3).
   If water comes out:
   - Examine if the water supply pressure is greater than the specified value in the Technical details. If necessary, install a pressure reducing valve (1).
   - Examine if the expansion valve in the protected cold supply set-up is installed correctly and is not defect. If necessary, replace the expansion valve.

7.8.1.2 Filling vented installations

To fill the water heater, proceed as follows:

1. Open the stop valve (11) in the hot water pipe and, if present, the stop valves (4) for the circulation pump (6).
2. Close the drain valve (9).
3. Open the nearest hot water draw-off point (14).
4. Open the stop valve (4) on the cold water side (A) so that cold water flows into the water heater.

5. Completely fill the water heater. When a full water jet flows from the nearest draw-off point, the water heater is full.
6. Bleed the entire installation of air, for example by opening all draw-off points.
7. The water heater is now under water supply pressure. There should now be no water coming out of the inlet combination expansion valve or (if used) out of the T&P valve (3). If there is, the cause might be:
   - The water supply pressure is greater than the specified value (see section 12.1).
     Rectify this by fitting a pressure reducing valve (1).
   - The expansion valve in the protected cold supply set-up is defective or incorrectly fitted.

7.8.2 Procedure for checking the supply pressure

To check the supply pressure, proceed as follows:

1. Isolate the appliance from the power supply (see section 4.2.2).
2. Carefully remove the covers from the appliance.
3. The electrical section is now visible.

ECH 32-220 to 63-370

4. There is a test nipple before the gas control valve (for natural gas appliances) or before the pressure-reducing valve (for LPG appliances) so that the supply pressure can be measured.
   This test nipple has a sealing screw. Loosen the sealing screw by a few turns. Do not completely loosen it as it can be difficult to retighten.

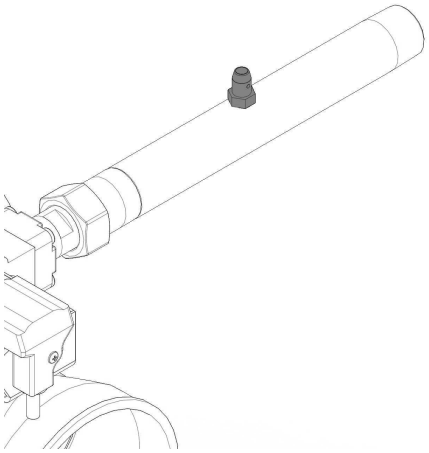

IMD-1095a R0

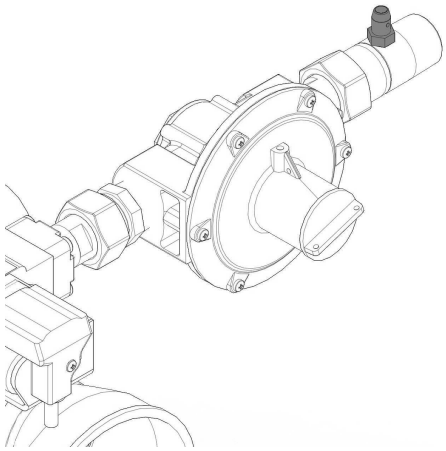

IMD-1096a R0

ECH 87-480 to 129-480

5. The gas control valve has a test nipple that can be used for measuring the supply pressure.
   This test nipple has a sealing screw. Loosen the sealing screw by a few turns. Do not completely loosen it as it can be difficult to retighten.

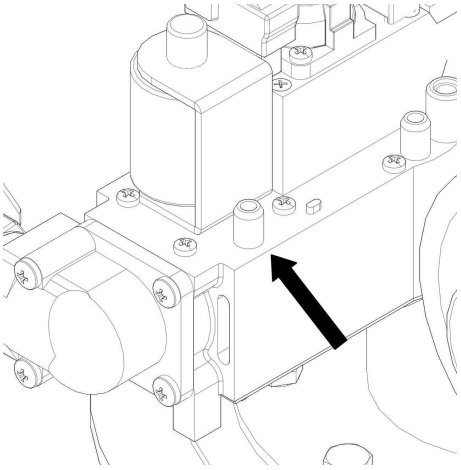

IMD-1097a R0

6. Open the gas supply and vent the gas supply line via the test nipple.
7. Connect a pressure gauge to the test nipple as soon as gas starts to flow from it.
8. Switch on the power to the appliance using the isolator on the appliance.
9. Switch the controller **ON** by setting the **0/I switch** to position **I**.
   The display will now show INTERNAL CHECK for about 10 seconds, and will then go to the main menu.

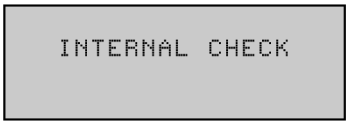

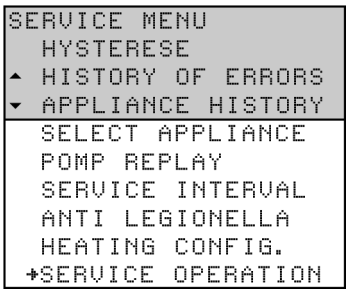

10. Select SERVICE OPERATION, FULL LOAD from the service menu.
11. Confirm with **[ENTER]**.
    The display shown here will appear

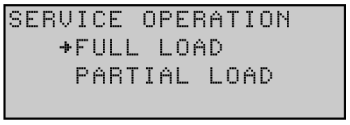

    The appliance is now in **Full load** mode and will ignite.
12. You must wait about 1 minute after the display shows the text RUNNING before reading the dynamic pressures (the fan needs this time to get up to full speed, so that you can get a reliable reading).
13. Use the pressure gauge to read the supply pressure and compare it against the value from the gas table (see section 12.3).

Note
Consult the mains gas supply company if the supply pressure is not correct.You cannot yet start using the appliance. You must now take the appliance out of service (see section 4.2.2).

Note
After conversion, you must check that the gas control valve is gastight.

14. Shut off the gas supply.
15. Disconnect the pressure gauge and retighten the sealing screw in the test nipple.
16. If there is nothing else you need to check or adjust, you can put the covers back on the appliance.

7.8.3 Procedure for checking the gas control valve pressure

The procedure for checking the gas control valve pressure is only applicable to appliances that have a pressure-reducing valve. If the appliance does not have a reducing valve, continue from adjusting the CO_2 value (see section 7.8.4).

To check the gas control valve pressure, proceed as follows:

1. Isolate the appliance from the power supply (see section 4.2.2).
2. Carefully remove the covers from the appliance.
3. The electrical section is now visible.
4. The gas control valve has a test nipple that can be used for measuring the gas control valve pressure. This test nipple has a sealing screw. Loosen the sealing screw by a few turns. Do not completely loosen it as it can be difficult to retighten.
5. Open the gas supply.
6. Connect a pressure gauge to the test nipple.
7. Switch on the power to the appliance using the isolator on the appliance.
8. Switch the controller **ON** by setting the **0/I switch** to position **I** .
   The display will now show INTERNAL CHECK for about 10 seconds, and will then go to the main menu.

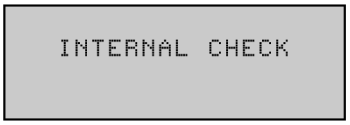

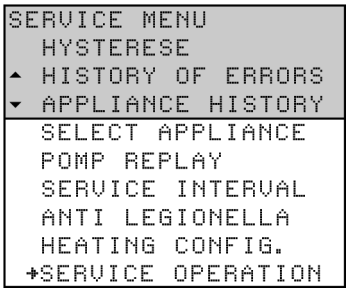

7.8.3.1 Procedure for checking the gas control valve pressure

1. Select SERVICE OPERATION, FULL LOAD from the service menu.
2. Confirm with **[ENTER]**.
   The display shown here will appear.

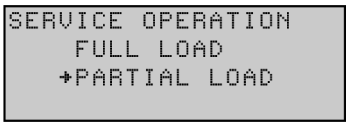

   The appliance is now in **PARTIAL LOAD** mode and will ignite.
3. You must wait about 1 minute after the display shows the text RUNNING before reading the dynamic pressures (the fan needs this time to get up to full speed, so that a reliable reading can be obtained).
4. Use the pressure gauge to read the pressure and compare it against the value from the gas table (see section 12.3).
5. If necessary, adjust the gas control valve pressure using the reducing valve's adjuster screw (2) until the value is within the range listed in the table.

Fig. Gas control valve pressure adjustment

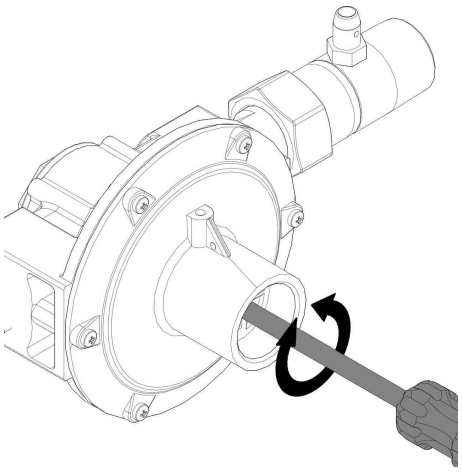

IMD-1096b R0

7.8.4 CO_2 adjustment

To check the CO_2 value under full load and partial load and to adjust it if necessary, proceed as follows:

1. Isolate the appliance from the power supply (see section 4.2.2).
2. Carefully remove the covers from the appliance.
3. The electrical section is now visible.
4. Place the CO_2 meter's measurement probe in the test nipple (58) of the flue gas outlet pipe (the number is a reference on the General working principle of the water heater (see section 5.1)).
5. Open the gas supply and vent the gas supply line.
6. Use the **main switch** to apply mains voltage to the appliance.
7. Start the appliance (see section 4.1).
8. Go to the **[🔧]** SERVICE OPERATION menu.
9. Generate a heat demand by draining the appliance until it is cold or by raising the value for T_{set} in the SERVICE menu. Use **[⬆]** for this.

Full load measurement

10. From the service menu, select:
    - SERVICE OPERATION | FULL LOAD
    - Confirm with **[ENTER]**.
      The appliance is now in **FULL LOAD** mode and will ignite.

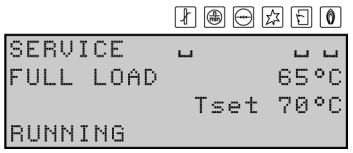

11. The appliance is now running at **FULL LOAD**. Read the value from the CO_2 meter and wait until this measured value has remained stable for some time. This may take several minutes.
12. Then compare the measured CO_2 value against the value from the table (see section 12.3).
    The CO_2 value at full load must be within ±1.0 vol% of the CO_2 value stated in the table.

ECH 32-220 to 63-370

13. If necessary, adjust the CO_2 value using the adjuster screw until the value is within the range listed in the table of CO_2 values.
    Use the Allen key supplied for this. The key can be found in the plastic bag that is attached to the appliance.

Fig. CO_2 adjustment (full load)

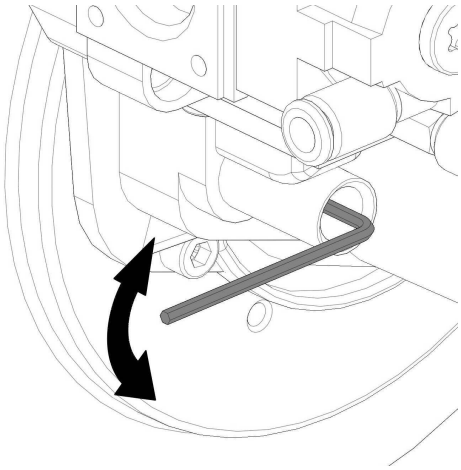

IMD-1095b R0

Note
Turning to the left (anticlockwise) means more gas (higher CO_2 level) and turning to the right (clockwise) means less gas (lower CO_2 level).

Note

Note
After conversion, you must check that the gas control valve is gastight.

14. If you have increased T_{set}, set it back to the original value using **[🡻]**.
15. Continue with the CO_2 measurement under partial load.

ECH 87-480 to 129-480

16. If the measure value is within the range given in the table of CO_2 values:
    - If you have increased T_{set}, set it back to the original value using **[🡻]**.
    - Continue with the CO_2 measurement under partial load.
17. If the measured value is not within the range of CO_2 values from the table, then you may not start the appliance up:
    - Switch off the appliance.
    - Turn off the gas supply to the appliance.
    - Put the covers back on the appliance.
18. Contact the appliance's supplier.

Partial load measurement

19. From the service menu, select:
    - SERVICE OPERATION | PARTIAL LOAD
    - Confirm with **[ENTER]**.
      The appliance is now in **PARTIAL LOAD** mode and will ignite

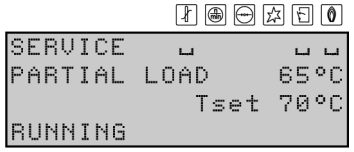

20. The appliance is now running at PARTIAL LOAD. Read the value from the CO_2 meter and wait until this measured value has remained stable for some time. This may take several minutes.
21. Compare the CO_2 value measured against the value measured under full load. The CO_2 value at partial load must be within ±0.3 vol% of the CO_2 value measured or adjusted under full load.
22. If necessary, adjust the CO_2 value using the adjuster screw until the value is within 0.3 vol% of the CO_2 value under full load.

Fig. ECH 32-220 to 63-370 - CO_2 adjustment (partial load)

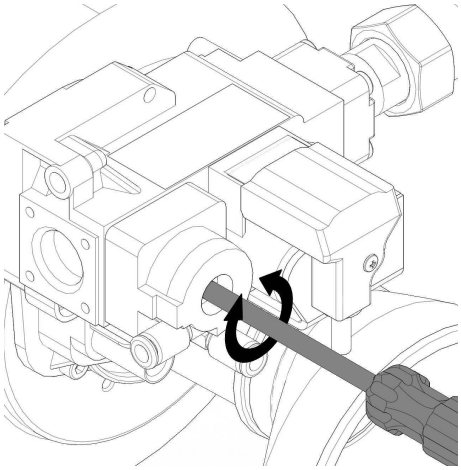

IMD-1095c R0

Fig. ECH 87-480 to 129-480 - CO_2 adjustment (partial load)

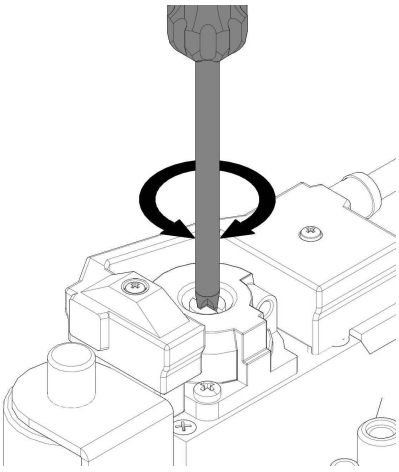

IMD-1097b R0

Note
Turning to the left (anticlockwise) means more less (lower CO_2 level) and turning to the right (clockwise) means more gas (higher CO_2 level).

Note
After conversion, you must check that the gas control valve is gastight.

23. Remove the CO_2 measurement probe from the measurement nipple of the flue gas outlet pipe.
24. Put the cap back on the measurement nipple of the flue gas outlet pipe.
25. Shut off the gas supply.
26. Replace the covers.

7.8.5 Switching pressure measurement

To measure the switching pressure, proceed as follows:

1. Isolate the appliance from the power supply (see section 4.2.2).
2. Carefully remove the covers from the appliance.
3. The electrical section is now visible.
4. Remove the black caps from the measurement point of the pressure switch.
5. Connect the + of the pressure gauge to the H of the measurement point of the pressure switch.
6. Connect the - of the pressure gauge to the L of the measurement point of the pressure switch.
7. Zero the pressure gauge.
8. Start the appliance (see section 4.1).
9. The appliance will now run the heating cycle (see section 4.1.1).
10. Read the pressure from the meter at the moment when the appliance switches from PRE PURGE to PRESSURE SWITCH. At this point, the appliance's display will show:

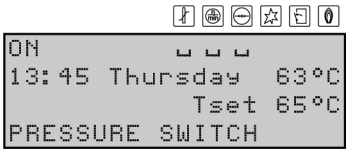

11. Check whether the measured value matches the value from the table (see section 12.1).

Note
If the message PRESSURE SWITCH does not appear, there is a fault. This must be resolved first by a qualified service engineer.

12. Shut off the gas supply.
13. Disconnect the pressure gauge.
14. Put the two black caps back on the pressure switch.
15. Replace the covers.

7.8.6 Turn on the water heater

Refer to the procedure in the user part to Turn on the water heater (see section 4.1).

7.9 Decommisioning

To decommission the water heater:

1. Turn off the water heater (see section 7.9.1)
2. Drain the water heater

7.9.1 Turn off the water heater

Refer to the procedure in the user part to Turn off the water heater (see section 4.2) and isolate the water heater from the mains power supply.

7.9.2 Draining

7.9.2.1 Draining unvented installations

Some service activities require the water heater to be drained. The procedure is as follows:

1. Activate the MENU with **[⌓]**.

2. Position the cursor in front of OFF.
3. Confirm OFF with **[ENTER]**.
4. Wait until the fan has stopped. The icon is then dimmed.

Caution
Failure to wait until the fan stops can cause damage to the water heater.

5. Switch the water heater **OFF** (position **0**) using the **control switch** on the operator interface.
6. Isolate the water heater from the power supply by setting the isolator between the water heater and the mains power supply to position **0**.
7. Shut off the gas supply (10).
8. Close the stop valve (11) in the hot water pipe.
9. Close the supply valve (4) in the cold water inlet (A).
10. Open the drain valve (9).

7.9.2.2 Draining vented installations

Some service activities require the water heater to be drained. The procedure is as follows:

1. Activate the MENU with **[ ]**.
2. Position the cursor in front of OFF.
3. Confirm OFF with **[ENTER]**.
4. Wait until the fan has stopped. The icon is then dimmed.

Caution
Failure to wait until the fan stops can cause damage to the water heater.

5. Switch the water heater **OFF** (position **0**) using the **control switch** on the operator interface.
6. Isolate the water heater from the power supply by setting the isolator between the water heater and the mains power supply to position **0**.
7. Shut off the gas supply (10).
8. Close the stop valve (11) in the hot water pipe.
9. Close the stop valve (4) between the cold water head tank and the cold water inlet (A).
10. Open the drain valve (9).
11. Bleed the water heater (or installation) so that it drains completely.

8 Conversion of gas type

Caution
Conversion of the water heater may only be carried out by a qualified person.

Use a special conversion kit to converse the water heater when:

- The water heater has to operate on a different family of gases (liquid petroleum gas or natural gas).
- The water heater has to operate on a gas category other than that for which the water heater has been configured at the factory.

You can order the conversion kit you need from the supplier of your water heater. The conversion kit contains all the parts needed to do the conversion and a description of how to do the conversion.

The following conversions are possible:

- Conversion from natural gas to LPG.
- Conversion from LPG to natural gas.
- Conversion from natural gas to natural gas.

Caution
After the conversion, make sure that the water heater is gas-tight. Make sure that the supply pressure, the gas control valve pressure, the CO_2 value and the switching pressure have the correct value.

9 Settings

9.1 Operator interface

The operator interface is completely menu-driven and enables the user to change settings and to verify the status and history of the water heater.

For more information about how to use the operator interface, refer to Operator interface (see section 3).

9.2 Service program

The service program is used by the installation engineer or service and maintenance engineer for:

- Displaying the water heater history;
- Displaying the error history;
- Displaying the water heater history;
- Display the selected water heater;
- Switching the pump on or off;
- Setting the service interval;
- Service mode;
- Setting legionella prevention;
- Setting the central heating configuration.

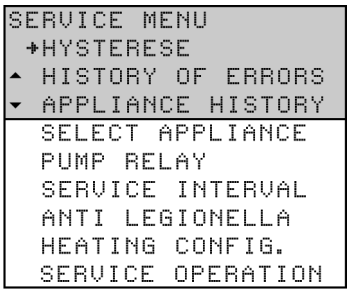

These sub-menus are briefly described in the following paragraphs.

Note
The notation convention for the service menu is identical to that of the main menu (see section 4.3.1). The difference is, you use **[🔧]** to bring up the service program, instead of **[🏠]** which brings up the main menu.

9.2.1 Hysteresis

The water heater does not start immediately when the water temperature is below the temperature setpoint. To prevent that the water heater switches on and off too often, there is a margin; the hysteresis.

The standard setting for the hysteresis is 5°C. The operating cycle starts when the water temperature drops to 5°C below the SETPOINT and ends when the water reaches 5°C above the SETPOINT.

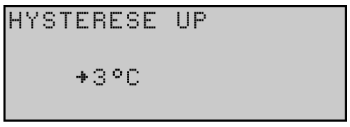

Set the hysteresis as follows:

- **[⏎]**: HYSTERESIS UP
  The figure shows an example

Set the hysteresis as follows:

- **[⏎]**: HYSTERESIS DOWN

9.2.2 Display the error history

Display the error history as follows:

- **[⏎]**: ERROR HISTORY

The controller will display an overview of "Blocking errors" and "Lock out errors". In both cases, note that the controller reserves 15 lines for the last 15 error messages. If there are fewer than 15 error messages, an ellipsis (...) is displayed. The display first shows the "Blocking errors". When **[ENTER]** is pressed, the "Lock out errors" are then displayed.

The figure shows an example of "Blocking errors". In this case, the text ERROR HISTORY is followed by (B).

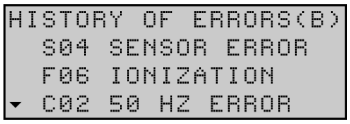

The figure shows an example of "Lock out errors". In this case, the text ERROR HISTORY is followed by (L).

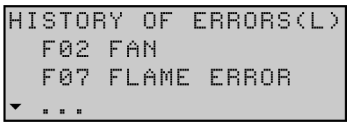

Note
For an overview of all errors and the possible causes, please refer to the relevant chapter (see section 11.1).

9.2.3 Display the water heater history

The water heater history sub-menu is used to display the burning hours, the number of ignitions, the number of flame errors and the number of ignition errors.

Call up the menu for displaying the water heater history as follows:

- **[⏎]**: APPLIANCE HISTORY
  The figure shows an example.

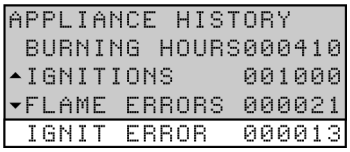

9.2.4 Display the selected water heater

Call up the menu for displaying the water heater selection as follows:

- **[🔧]**: SELECT APPLIANCE
  The water heater number can be found on the rating plate.
  The water heater selection has been correctly preset in the factory.

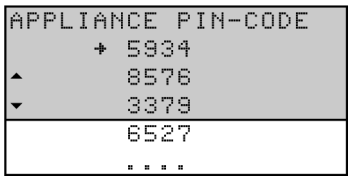

9.2.5 Switch the pump on or off

If a program-controlled pump (see section 7.7.3.2) is installed, it can be switched ON or OFF as follows:

- **[🔧]**: PUMP RELAY
  The standard setting for the pump relay is OFF.

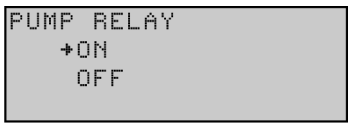

If the mode WEEK PROGRAM or EXTRA PERIOD is active, then the setting for mode WEEK PROGRAM or EXTRA PERIOD has priority over the ON/OFF selection for the pump relay in the service menu.

Example
One of the week program periods is currently active. During this period, the pump relay setting is OFF. If the pump relay is set ON in the service menu, the pump will nonetheless remain OFF. The pump will only switch ON once the week program period has ended.

9.2.6 Setting the service interval

The service interval is a feature of the controller to help the service and maintenance engineer set the frequency of maintenance.

The service interval is determined by the number of months that the appliance has been running. This can be set to 6, 9 and 12 months. The default service interval is 12 months. When the preset number of months has been reached, an appropriate message will appear (see section 3.6.3).

Set the service interval as follows:

- **[🔧]**: SERVICE INTERVAL

To erase the message SERVICE REQUIRED, refer to Finalization (see section 10.4).

9.2.7 Service mode

The Installation engineer uses the SERVICE OPERATION menu to adjust the water heater CO_2 setting during FULL LOAD and PARTIAL LOAD operation.

Use **[⚙]**:SERVICE OPERATION to display the SERVICE OPERATION menu.

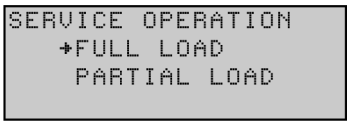

[↓] and **[↑]** can be used to switch between PARTIAL LOAD and FULL LOAD.

If there is a heat demand, the water heater will first run through a startup cycle, then continue to operate in **FULL LOAD** or **PARTIAL LOAD** mode.

If there is no heat demand, the installation engineer must create one. This can be done by draining the water heater until it is cold or by temporarily raising the set point using **[↑]**. After adjustment, the set point must be set back to the original value using **[↓]**.

if you exit the SERVICE OPERATION menu or if no buttons are pressed for a period of 15 minutes, the water heater will revert to the original operating mode.

Temporarily raising the setpoint during FULL LOAD or PARTIAL LOAD

1. **[⚙]**:>:SERVICE OPERATION.

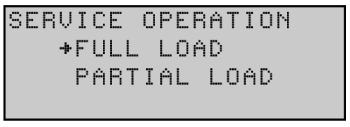

2. Select FULL LOAD or PARTIAL LOAD.
   The example below describes the situation for FULL LOAD, which is identical to that for PARTIAL LOAD.
3. Confirm with **[ENTER]**.

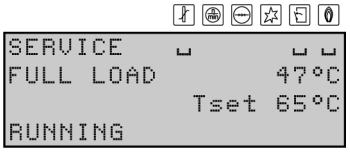

4. To create a heat demand, you can temporarily raise the set point using **[↑]** to e.g. 70ºC.

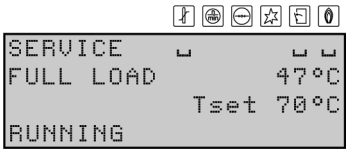

5. Confirm with .**[ENTER]**.
6. After adjusting for the CO_2 value (see section 7.8.4), you must use **[↑]** to restore the set point to its original value.
7. Press **[⌂]** twice to return to the MENU menu via the SERVICE OPERATION menu.

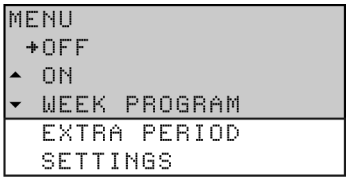

9.2.8 Setting legionella prevention

To prevent infection with legionella bacteria, the water heater heats the water to 65 °C once per week, for 1 hour. This period is adjustable. By default, this period is set to Monday from 02:00 to 03:00 hours.

9.2.8.1 Switching legionella prevention on and off

To switch legionella prevention on or off, select:

- **[⌐]**: ANTI LEGIONELLA

```
ANTI LEGIONELLA
   +YES
    NO
```

- Select NO to switch legionella prevention off.
- Select YES to switch legionella prevention on. The following screen appears:

```
ON    MO 02:00     LEG
OFF   MO 03:00
Tset 65°C
+START      CHANGE
```

- Select START to activate the period currently displayed.
  The following display appears. This display indicates that legionella prevention is switched on.

```
LEG          ⌴       ⌴ ⌴
02:45 Monday     60°C
MO 03:00   Tset 65°C
RUNNING
```

9.2.8.2 Changing legionella prevention start time

If you wish to change the start time, select:

- **[⌐]**: ANTI LEGIONELLA | YES | Change
  The following display appears.

```
ON   +MO 02:00     LEG
OFF   MO 03:00
Tset 65°C
 START
```

- Now set the day and time the same way as described for setting an extra period in the week menu (see section 4.3.9). In this case however, the pump will be automatically started.
- Select START to start.

9.2.9 Setting the central heating configuration

Use this menu to specify whether a central heating system is connected to the installation.

Note
This function is not yet available.

- **[⌐]**: SETTINGS HEATING.

```
HEATING CONFIG.
 +HEATING CONNECTED
▲ HEATING SETPOINT
▼ SIMULTANEITY
```

10 Maintenance

The water heater needs maintenance at least once a year. The maintenance interval is determined by the water quality, the average burning time each day and the set water temperature.

On the operator interface, the maintenance interval can be set as a reminder. The display shows SERVICE REQUIRED when the pre-set interval has elapsed.

To determine the correct interval, Lochinvar recommends to do a system check on both the water and the gas side, three months after installation.

Note
Do maintenance to maintain an effective and efficient transfer of heat to the water. This significantly increases the service life of the water heater.

Note
When needed, spare parts can be ordered. To be sure that you receive the correct spare parts, look at the data plate for the full serial number, the water heater model, and the used gas category. Use this information when you order the spare parts.

Do the following maintenance activities:

- Preparation (see section 10.1)
- Water side maintenance (see section 10.2)
- Gas side maintenance (see section 10.3)
- Finalization (see section 10.4).

10.1 Preparation

To test whether all components are still working properly, complete the following steps:

1. Activate the MENU with **[ ]**.
2. Use **[↑]** and **[↓]** to place the cursor beside OFF.
3. Confirm OFF with **[ENTER]**.

4. Wait until the fan has stopped. The icon is then dimmed.

Caution
Failure to wait until the fan stops can cause damage to the water heater.

5. Switch the appliance **OFF** (position **0**) using the **control switch** on the operator interface.
6. Switch the controller **ON** by setting the **control switch** to position **I**.

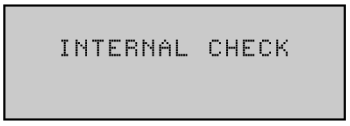

The display will now show INTERNAL CHECK for about 10 seconds, and will then go to the main menu.

7. Activate **ON mode** by going through the following steps:
   - Press once on the blue arrow **[↓]** to position the cursor beside ON, then press **[ENTER]**.
   - Confirm the selection START OPERATION with **[ENTER]**.
8. If there is no heat demand, then raise $T_{set.}$ (see section 4.3.3) Note the original setting. Draw some hot water off to create heat demand.
9. Check whether the heating cycle runs correctly (see section 4.1.1).
10. If you have adjusted T_{set} , return it to the original value (see section 4.3.3).
11. Remove the plastic cover on the top of the appliance.
12. Check the supply and burner pressures (see section 7.8.2) and adjust them where necessary.
13. Check that all components of the chimney flue system are properly attached.
14. Check the pressure differential across the pressure switch (see section 7.8.5) and, if this is too low, the heat exchanger should be cleaned (see section 10.3.2).
15. Test the operation of the overflow valve of the protected cold supply setup. The water should spurt out.
16. Check the drainage pipes from the discharge points of all valves and remove any scale deposits that may be present.
17. Drain the water heater, see draining (see section 7.9.2).

10.2 Water-side maintenance

To do water side maintenance:

- Descale the tank (see section 10.2.1)
- Clean the condensate drain (see section 10.2.2)

10.2.1 Descale the tank

Scale and lime build-up prevent effective conduction of the heat to the water. Periodic cleaning and descaling prevents build-up of these deposits. This increases the service life of the water heater, and also improves the heating process.

Take the rate of scale formation into account when deciding on the service interval. Scale formation depends on the local water composition, the water consumption and the water temperature setting. A water temperature setting of maximum 60°C is recommended for the prevention of excessive scale build-up.

To guarantee a good, watertight seal around the cleaning opening, replace the gasket, washers, bolts and, if necessary, the lid with new parts before reassembly (see the figure). A special set is obtainable from the supplier/manufacturer.

To simplify descaling and cleaning of the tank, the water heater is equipped with two cleaning openings.

Fig. Cleaning opening

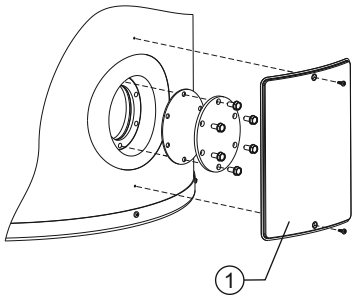

IMD-0080 R1

1. Remove the cover plate (1) on the outer jacket (see the figure).
2. Undo the bolts.
3. Remove the cover and the gasket.
4. Inspect the tank and remove the loose scale deposits and contamination.
5. If the scale cannot be removed by hand, descale the water heater with a descaling agent. Contact the supplier/manufacturer for advice on what descaling agent to use.
6. Close the cleaning opening. To avoid damage to the tank, tighten the bolts that fasten the lid with a torque no greater than 50 Nm. Use suitable tools for this.

10.2.2 Clean the condensate drain

To prevent blockages, it is essential to clean the condensation water discharge and condensation trap regularly.

10.3 Gas-side maintenance

Do gas side maintenance when the water heater does not operate correctly, the air pressure differential is not correct and/or the CO_2 value is not correct.

To do gas side maintenance:

- Clean the burner (see section 10.3.1)
- Clean the heat exchanger (see section 10.3.2)

10.3.1 Clean the burner

1. Detach the burner.
2. Remove all contamination present on the burner.
3. Fit the burner.

10.3.2 Clean the heat exchanger

1. Detach the burner.
2. Clean the combustion chamber of the heat exchanger using a vacuum cleaner and a soft brush.
3. Detach the chimney flue.
4. Clean the end of the heat exchanger using tap water.
5. Fit the burner.
6. Fit the chimney flue.

Note
Check the pressure differential again after cleaning. If the pressure differential is too low following cleaning, please contact the supplier of the water heater.

10.4 Finalization

To finalize the maintenance, carry out the following steps:

1. Fill the water heater (see section 7.8.1).
2. Start the water heater (see section 4.1).
3. Check the CO_2 value (see section 7.8.4).
4. Check the switching pressure of the pressure switch (see section 7.8.5).
5. Erase the message SERVICE REQUIRED. The displayed message can be reset in either of two ways:
   - *Temporary reset:* To postpone the message, press RESET once. The message will reappear on the display 7 days later.
   - *Full reset:* To fully reset the message, press and hold both RESET and ENTER at the same time for 5 sec.

On completion of the full reset of the message, the message below will appear on the display. This message will NOT be shown after a temporary reset of the message.

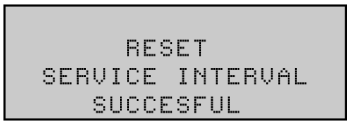

11 Troubleshooting

11.1 Errors and warnings

The water heater can have three different kinds of errors and warnings:

- General errors (see section 11.1.1), which are not displayed
- Displayed errors, which are divided in two different groups:
  - Lock out errors: when the cause is removed, you can reset the error to resume operation. The displayed code and the back-light of the display blink.
  - Blocking errors: when the cause is removed, the error resets automatically to resume operation. The code is displayed continuously and the back-light of the display blinks.

  Errors are reported on the display as follows:
  - Line one: an error code and a brief description. The code consists of a letter and two digits.
  - Lines two, three and four: a long description, alternating with a recommended action. See the figures. The first shows a possible error, the second shows the appropriate checking action.

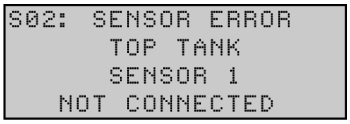

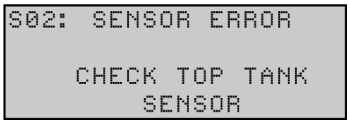

- Displayed warnings (see section 11.1.3)

Note
It is possible to view the error history of the water heater, refer to Error history (see section 9.2.2).

11.1.1 General errors

Note
For the coding of the connections, refer to the Electrical wiring diagram.

Indication	Cause	Measure
Gas smell	There is a gas leak	• Close the mains gas valve at once. • Do not operate any switches. • No naked flames. • Ventilate the boiler room. • Immediately contact your installation engineer or your local gas company.
The display is off	The water heater is off.	Turn on the water heater (see section 4.1).
	There is no supply voltage.	Make sure that: • the control switch is set to **I**. • the isolator is in **ON** position. • there is power on the isolator. • there is power to the electrical connector block. The measured voltage must be 230 V_{AC} (-15%, +10%).
	Defective fuse(s)	Replace the fuse(s).
Water leakage	There is a leakage from a threaded water connection.	Tighten the threaded connection.
	There is a condensate leakage	Make sure that the condensation water discharge is working properly. If necessary, correct the water discharge.
	There is a leakage from another nearby water heater or pipe segment.	Trace the leakage.
	There is a leakage from the water heater tank.	Contact the supplier of your water heater.
Explosive ignition	The gas supply pressure is incorrect.	Check the gas supply pressure, refer to Gas supply pressure.
	The CO_2 value is incorrect.	Check the CO_2 value, refer to CO_2 value.
	The burner is contaminated.	Clean the burner, refer to Gas-side maintenance (see section 10.3).
	There is an air leakage between the venturi and the flexible air connector.	Make sure that: • the flexible air connector is not damaged. If necessary, replace the flexible air connector. • the flexible air connector is correctly connected to the venturi. If necessary, tighten the clamp.

Indication	Cause	Measure
Insufficient or no hot water	The water heater is off.	Turn on the water heater (see section 4.1).
	There is no supply voltage.	Make sure that: • the control switch is set to **I**. • the isolator is in **ON** position. • there is power on the isolator. • there is power to the electrical connector block. The measured voltage must be 230 V_{AC} (-15%, +10%).
	The hot water supply is used up.	Reduce the hot water consumption. Wait until the water heater heats up.
	The controller is in the OFF mode.	Set the controller in the ON mode.
	The temperature (T_{set}) is set too low.	Set the temperature (T_{set}) to a higher value.
CO_2 value (at full load) is not correct	The unit is not set for the correct gas type	• Make sure that the gas type corresponds with the information on the rating plate • Make sure if the venturi restrictor has the correct diameter, refer to Gas details.
	Contaminated venturi	Remove any contamination from the venturi inlet.
	Leakage between venturi and flexible venturi connector	• Make sure that the flexible venturi connector is not damaged. If necessary replace the flexible venturi connector • Make sure that the flexible venturi connector is correctly connected. If necessary, tighten the clamp.
	Recirculation of flue gases	• Make sure that the CO_2-value measured in the flue gas outlet is correct, refer to CO_2 value. • Make sure that the CO_2 value measured in the air inlet is below 0.5 vol%. • If necessary, reconnect the venting system and change the necessary seals.

11.1.2 Displayed errors

Note
For the coding of the connections, refer to the Electrical wiring diagram.

Note
Contact your service and maintenance engineer if the error persists.

Code and description	Cause	Measure
S01 (blocking error) Open circuit from temperature sensor T_2 at the bottom of the tank.	Sensor is not (correctly) connected	Connect the sensor lead to JP3
	Damaged cable and/or defective sensor	Replace the cable and/or sensor

Code and description	Cause	Measure
S02 (blocking error) Open circuit from sensor 1 of temperature sensor T_1 at the top of tank(1).	Sensor is not (correctly) connected	Connect the sensor lead to JP5
	Damaged cable and/or defective sensor	Replace the cable and/or sensor
S03 (blocking error) Open circuit in sensor 2 of temperature sensor T_1 at the top of the tank (1).	Sensor is not (correctly) connected	Connect the sensor lead to JP5
	Damaged cable and/or defective sensor	Replace the cable and/or sensor
S04 (blocking error) Open circuit from dummy 1.	Dummy is not (correctly) connected	Connect the dummy sensor (dummy sensor 1 and 2) leads to JP4.
	Defective dummy	Replace the dummy sensor
S05 (blocking error) Open circuit from dummy 2	Dummy is not (correctly) connected	Connect the dummy sensor (dummy sensor 1 and 2) leads to JP4.
	Defective dummy	Replace the dummy sensor
S11 (blocking error) Short circuit in temperature sensor T_2 at the bottom of the tank.	Short circuit in sensor circuit	Replace the cable and/or sensor.
S12 (blocking error) Short circuit in sensor 1 of temperature sensor T_1 at top of tank(1)	Short circuit in sensor circuit	Replace the cable and/or sensor.
S13 (blocking error) Short circuit in sensor 2 of temperature sensor T_1 at the top of the tank (1).	Short circuit in sensor circuit	Replace the cable and/or sensor.
S14 (blocking error) Short circuit from dummy 1	Short circuit in sensor circuit	Replace the cable dummy sensor (2).
S15 (blocking error) Short circuit from dummy 2	Short circuit in sensor circuit	Replace the cable dummy sensor (2).
F01 (blocking error) Defect in power supply circuit	Live and neutral connected wrong way around.	Be sure to connect the live and neutral correctly (see section 7.7); the water heater is phase-sensitive
	Condensation on the flame probe	• Disconnect the lead at the flame probe • Ignite the water heater three times, with an interrupted ionisation circuit • Reconnect the ionisation lead to the flame probe • Ignite the water heater again • The repeated ignition attempts will have caused the condensation to evaporate
	Floating neutral	Install an isolating transformer (see section 7.7.3.1)

Code and description	Cause	Measure
F02 (lock out error) Fan fails to run at correct speed.	Defective motor and/or rotor.	• Check the motor and rotor • Replace the fan if the motor or rotor is defective. • Reset controller
	Damaged wiring	• Check the wiring between the fan and the controller. • If any wires are damaged, the wiring harness must be replaced. • Reset controller
	Contaminated or blocked fan	• Check if the fan is dirty and repair it if necessary. • Check that the rotor can rotate freely • Reset controller
	Because of a drop in the supply voltage, the fan will not run at the correct speed.	• Check the supply voltage, this must be 230 VAC(-15%, +10%) • Reset controller
F03 (lock out error) The pressure switch fails to work correctly	Damaged wiring/Open circuit	• Check the wiring between the pressure switch and the controller • If necessary, replace the wiring
	Pressure switch not closing	• Check the speed of the fan (see section 12.1). • Check that the hoses on the pressure switch and the air supply hose between fan and burner are correctly fitted. Refit them if necessary • Check for cracks in the hoses on the pressure switch and in the air supply hose between fan and burner. If necessary, replace the hoses. • Check whether the chimney flue is compliant. • Check for blockage in the chimney flue. Remove any blockage that may be present • Check for blockage in the condensation water discharge. Remove any blockage that may be present. • Measure the pressure differential across the pressure switch. See the table (see section 12.1). If there is insufficient pressure differential, clean the heat exchanger. If the pressure differential is acceptable, check that the pressure switch is closing, using a multimeter

Code and description	Cause	Measure
F04 (lock out error) Three unsuccessful ignition attempts.	No gas	• Open the main gas supply valve and/or the manual gas supply valve before the gas control valve • Check supply pressure to the gas control valve • If necessary, restore the gas supply
	Air in the gas pipes	Bleed the air out of the gas pipe (see section 7.8.2) and measure the supply pressure and burner pressure.
	Defect in the hot surface igniter circuit	• Check that the hot surface igniter is correctly connected (JP2). • Check the wiring of the hot surface igniter. • Measure the resistance across the hot surface igniter. This must lie between 2 and 10 Ohm (at room temperature). • Check that the hot surface igniter lights up during ignition. • If necessary, replace the hot surface igniter.
	Defect in the ionisation circuit	• Check that the flame probe is correctly connected (JP2) • Check the wiring of the flame probe • Measure the ionisation current. This must be a minimum of 1.5 microA. • If necessary, replace the wiring.
	Supply voltage too low	Check the supply voltage, this must be 230 VAC(-15%, +10%)
F05 (lock out error) Too many flame errors have been signaled.	Incorrect roof or wall flue terminal. Recirculating flue gases.	• Check that the correct roof or wall flue terminal has been installed (see section 7.6). • If necessary, install the correct roof or wall flue terminal. • Check that the roof or wall flue terminal discharges into a permitted area.
F06 (blocking error) Short circuit between flame probe and earth	Damaged cable in contact with metal surface or bent flame probe.	Check the wiring and the flame probe. Replace the wiring and/or flame probe if necessary.
	Ceramic part of the flame probe is broken/cracked.	• Check whether the ceramic part of the flame probe is still intact, in the vicinity of the air distribution plate of the burner. • If not the flame probe must be replaced.
F07 (lock out error) A flame has been detected after the gas control valve was closed.	Defective gas control valves	• Check whether there is still burner pressure present, after the gas control valves have closed. • Check whether a flame is still present, after the gas control valves have closed. • If this is the case, the gas control valve must be replaced.
F08 (lock out error) Error message from safety relay	Flame detection before the gas control valve opened.	• Reset controller. • If the error appears again, replace the controller.
F09 (lock out error) Water temperature protection.	Temperature at the top of the tank exceeds 93 ºC.	• Check that the circulation pump (if present) is working • Check the position of temperature sensor T_1 • Reset controller

Code and description	Cause	Measure
F11 (blocking error) Flame detection with closed gas control valve.	Defective gas control valves	See F07.
F19 (blocking error) Power supply voltage is too low.	There is not enough supply voltage.	1. Check that there is power to the controller 2. The measured voltage must be 230 VAC (-15%, +10%)
C02 (lock out error) Error message from the controller.	Incorrect reference voltage from the AD converter.	1. Reset controller. 2. Check that the frequency of the power supply is compliant (see section 12.1). If not, contact your installation engineer 3. If the frequency is correct but the error persists, replace the controller.
Internal error message from the controller.	• EEPROM read error • 50 Hz error • Internal communication error	
Internal error message from the controller.	• Gas valve relay error • Safety relay error • Ignition relay error • RAM error • EEPROM error • EEPROM contents do not match the software version • Processor software error	
C03 (blocking error) Reset error	Too many resets in too short a period	Wait for the error to disappear (maximum 1 hour). If the error does not disappear, replace the water heater controller.
C04 (blocking error) Appliance selection error	Incorrect water heater selection / Incorrect selection resistor	1. Check whether the correct water heater is selected (see section 12.1). 2. If the correct water heater is selected, fit the correct selection resistor. 3. If incorrect water heater selected, select the correct one.
E01 (blocking error) The temperature protection at the top of the tank has been activated.	The temperature of the water at the top of the tank is > 88 ºC.	None. This is a temporary message that may appear from time to time, but will disappear automatically.
E03 (lock-out error) Error in temperature sensor T_1 at the top of the tank.	The two temperature sensors in the tank detect a difference of > 10°C over a period of at least 60 seconds.	1. Check sensor position and wiring. 2. Reset the controller if necessary. Replace the sensor if the error persists.
E04 (lock-out error) Defect in the dummy sensor$_{(2)}$.	The two temperature sensors detect a difference of >10 ºC over a period of at least 60 seconds.	1. Check the wiring of the dummy 1 and dummy 2. 2. Reset the controller if necessary. Replace the dummy sensor if the error persists.

11.1.3 Warnings

Note
For the coding of the connections, refer to the Electrical wiring diagram.

Indication	Cause	Remark
Maximum burning hours: Service is required	The actual burning hours have exceeded the pre-set burning hours.	The water heater operates, but displays this warning. Periodic maintenance is a part of the Warranty. When you do not obey this condition, the warranty will void.
Anode protection is not working	• The cables between the potentiostat and anodes are loose or have been connected incorrectly. • The earth connection of the anodes is loose. • The water heater is not filled with water.	1. Connect the wiring correctly and the warning will disappear. 2. If the wiring is correct but the warning remains, check that the earth connection is good and whether the tank is filled with water. **Note** The water heater is functioning, but there is no anode protection for the tank.

12 Appendices

12.1 Technical details

Description	Unit	ECH 32-220	ECH 33-370	ECH 52-370	ECH 63-370
General					
Contents	liters	220	374	374	374
Empty Weight	kg	177	214	214	214
Maximum floor load	kg	397	588	588	588
Maximum working pressure	kPa (bar)	800 (8)	800 (8)	800 (8)	800 (8)
Control thermostat - adjustment range	°C	40...80	40...80	40...80	40...80
Control thermostat - default value	°C	65	65	65	65
Hysteresis upwards - adjustment range	°C	0...5	0...5	0...5	0...5
Hysteresis upwards - default value	°C	5	5	5	5
Hysteresis downwards - adjustment range	°C	0...10	0...10	0...10	0...10
Hysteresis downwards - default value	°C	5	5	5	5
Number of (electrical) anodes	-	1	2	2	2
Observed pressure differential across the pressure switch	Pa	≥ 165	≥ 165	≥ 165	≥ 165
Pressure differential to open the pressure switch	Pa	< 115	< 115	< 115	< 115
Heating time ΔT = 45 °C	min.	22	35	23	19
Electrical					
Electrical power consumption	W	45	45	75	115
Supply voltage (-15%, +10% VAC)	volts	230	230	230	230
Mains frequency (± 1Hz)	Hz	50	50	50	50
IP class	-	IP 20	IP 20	IP 20	IP 20

Description	Unit	Value
Maximum mains pressure of cold water supply	kPa (bar)	800 (8)
T&P overflow pressure	kPa (bar)	1000 (10)
T&P overflow temperature	°C	97

Description	Unit	ECH 32-220	ECH 33-370	ECH 52-370	ECH 63-370
Load profile	-	XXL	XXL	XXL	XXL
Energy Efficiency Class (Energy Label)	-	A	A	A	A
Energy Efficiency	%	91	91	91	90
Daily Electricity Consumption	kWh	0.207	0.210	0.211	0.212
Daily Fuel Consumption	kWh GCV	26.501	26.552	26.562	26.632
Mixed Water 40°C (V40)	ltr.	1255	∞	∞	∞
Additional Load Profile	-	-	-	3XL	3XL
Energy Efficiency	%	-	-	89	89
Daily Electricity Consumption	kWh	-	-	0.251	0.252
Daily Fuel Consumption	kWh GCV	-	-	52.051	52.162
Mixed Water 40°C (V40)	ltr.	-	-	559	601

Description	Unit	ECH 87-480	ECH 106-480	ECH 129-480
General				
Contents	liter	488	488	488
Empty Weight	kg	405	405	405
Maximum floor load	kg	893	893	893
Maximum working pressure	kPa (bar)	800 (8)	800 (8)	800 (8)
Control thermostat - adjustment range	°C	40...80	40...80	40...80
Control thermostat - default value	°C	65	65	65
Hysteresis upwards - adjustment range	°C	0...5	0...5	0...5
Hysteresis upwards - default value	°C	5	5	5
Hysteresis downwards - adjustment range	°C	0...10	0...10	0...10
Hysteresis downwards - default value	°C	5	5	5
Number of (electrical) anodes	-	2	2	2
Observed pressure differential across the pressure switch	Pa	≥ 260	≥ 260	≥ 260
Pressure differential to open the pressure switch	Pa	< 210	< 210	< 210
Heating time ΔT = 45 °C	min.	18	15	12
Electrical				
Electrical power consumption	W	95	145	240
Supply voltage (-15%, +10% VAC)	volts	230	230	230
Mains frequency (± 1Hz)	Hz	50	50	50
IP class	-	IP 20	IP 20	IP 20

Description	Unit	Value
Maximum mains pressure of cold water supply	kPa (bar)	800 (8)
T&P overflow pressure	kPa (bar)	1000 (10)
T&P overflow temperature	°C	97

Description	Unit	ECH 87-480	ECH 106-480	ECH 129-480
Load profile	-	3XL	3XL	3XL
Energy Efficiency Class (Energy Label)	-	-	-	-
Energy Efficiency	%	93	93	92
Daily Electricity Consumption	kWh	0.237	0.346	0.257
Daily Fuel Consumption	kWh GCV	49.811	49.922	50.060
Mixed Water 40°C (V40)	ltr.	1368	∞	∞
Additional Load Profile	-	-	-	-
Energy Efficiency	%	-	-	-
Daily Electricity Consumption	kWh	-	-	-
Daily Fuel Consumption	kWh GCV	-	-	-
Mixed Water 40°C (V40)	ltr.	-	-	-

12.2 Dimensions

Size	Description	Unit	ECH 32-220	ECH 33-370	ECH 52-370	ECH 63-370
A	Overall height	mm	1390	1925	1925	1925
C	Position on pallet	mm	-	-	-	-
D	Appliance diameter	mm	705	705	705	705
E	Depth	mm	-	-	-	-
F	Width	mm	-	-	-	-
G	Diameter of flue gas discharge	mm	100/150	100/150	100/150	100/150
H	Height of flue gas outlet/air supply	mm	1365	1890	1890	1890
Hx	x position flue gas outlet	mm	265	265	265	265
Hy	y position flue gas outlet	mm	375	375	375	375
K	Height of gas connection	mm	1285	1815	1815	1815
M	Height of cold water supply	mm	170	160	160	160
N	Height of hot water outlet	mm	1390	1925	1925	1925
Ny	y position of hot water outlet	mm	205	205	205	205
P	Height of cleaning opening	mm	170	175	175	175
R	Height of drain valve connection	mm	85	75	75	75
S	Height of T&P valve connection	mm	900	1410	1410	1410
W	Height of condensation drain	mm	150	150	150	150
1	Cold water supply connection (external)	-	R $1^1/_2$	R $1^1/_2$	R $1^1/_2$	R $1^1/_2$
2	Hot water outlet (male)	-	R $1^1/_2$	R $1^1/_2$	R $1^1/_2$	R $1^1/_2$
3	Gas control valve connection (external)	-	R $^3/_4$"	R $^3/_4$"	R $^3/_4$"	R $^3/_4$"
4	Drain valve connection (internal)	-	1"	1"	1"	1"
5	T&P valve connection (female)	-	1"-11.5 NPT	1"-11.5 NPT	1"-11.5 NPT	1"-11.5 NPT
6	Cleaning/inspection opening	mm	95 x 70	95 x 70	95 x 70	95 x 70
7	Condensation drainage connection (female)	-	Ø 40	Ø 40	Ø 40	Ø 40

Fig. Dimensions ECH 32-220, 33-370, 52-370, 63-370

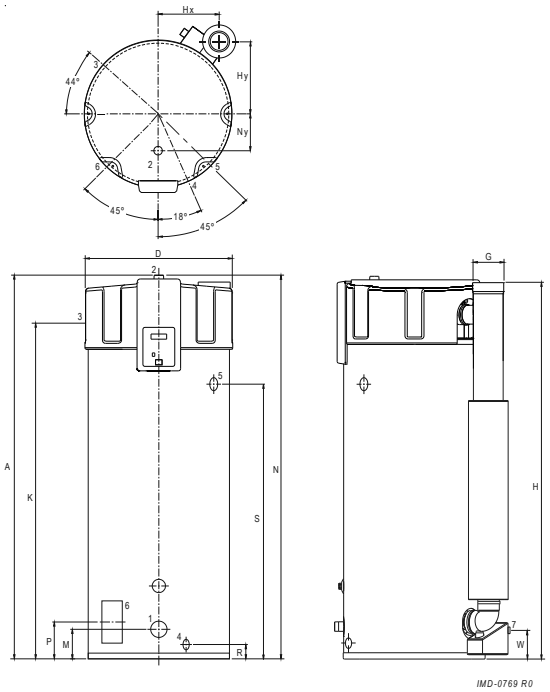

Size	Description	Unit	ECH 87-480	ECH 106-480	ECH 129-480
A	Overall height	mm	2060	2060	2060
C	Position on pallet	mm	530	530	530
D	Appliance diameter	mm	850	850	850
E	Depth	mm	1000	1000	1000
F	Width	mm	900	900	900
G	Diameter of flue gas discharge	mm	130/200	130/200	130/200
H	Height of flue gas outlet/air supply	mm	1995	1995	1995
Hx	x position flue gas outlet	mm	310	310	310
Hy	y position flue gas outlet	mm	440	440	440
K	Height of gas connection	mm	1855	1855	1855
M	Height of cold water supply	mm	225	225	225
N	Height of hot water outlet	mm	2060	2060	2060
Ny	y position of hot water outlet	mm	205	205	205
P	Height of cleaning opening	mm	290	290	290
R	Height of drain valve connection	mm	225	225	225
S	Height of T&P valve connection	mm	1425	1425	1425
W	Height of condensation drain	mm	240	240	240
1	Cold water supply connection (external)	-	R $1^1/_2$	R $1^1/_2$	R $1^1/_2$
2	Hot water outlet (male)	-	R $1^1/_2$	R $1^1/_2$	R $1^1/_2$
3	Gas control valve connection (external)	-	R $^3/_4$"	R $^3/_4$"	R $^3/_4$"
4	Drain valve connection (internal)	-	$^3/_4$"	$^3/_4$"	$^3/_4$"
5	T&P valve connection (female)	-	1"-11.5 NPT	1"-11.5 NPT	1"-11.5 NPT
6	Cleaning/inspection opening	mm	95 x 70	95 x 70	95 x 70
7	Condensation drainage connection (female)	-	Ø 40	Ø 40	Ø 40

Fig. Dimensions ECH 87-480, 106-480, 129-480

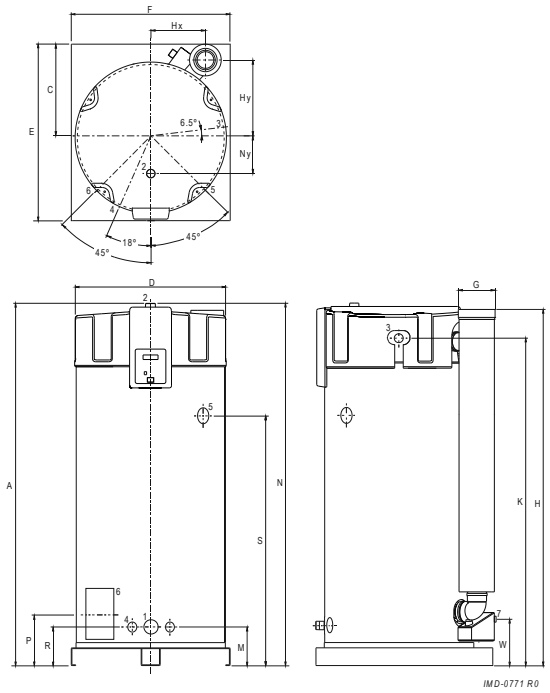

12.3 Gas details

Description	Unit	ECH 32-220	ECH 33-370	ECH 52-370	ECH 63-370
Gas category 2H: G20					
Diameter of the venturi restrictor	mm	-	-	-	-
Nominal Load (gross)	kW	32.7	33.9	53.1	64.4
Nominal output	kW	31.5	33.3	51.2	61.5
Supply pressure	mbar	20	20	20	20
CO_2 (full load)	vol%	9.0 ± 1.0	9.0 ± 1.0	9.0 ± 1.0	9.0 ± 1.0
O_2 (full load)	vol%	4.8 ± 1.8	4.8 ± 1.8	4.8 ± 1.8	4.8 ± 1.8
Gas consumption (1)	m^3/h	3.1	3.2	5.0	6.0
NO_x-emission	mg/kWh GCV	24	32	36	37
Mass flow rate flue gases (minimal load)	kg/h	24.3	24.3	24.3	24.3
Mass flow rate flue gases (nominal load)	kg/h	52.2	54.0	84.6	102.6
Flue gas temperature (nominal load)	ºC	44	54	63	68
Gas category 3P: G31					
Diameter of the venturi restrictor	mm	6.00	6.00	6.00	6.00
Nominal Load (gross)	kW	32.0	33.10	52.0	63.0
Nominal output	kW	31.5	33.3	51.2	61.5
Supply pressure	mbar	37 / 50	37 / 50	37 / 50	37 / 50
Gas control valve pressure	mbar	12.0 ± 2.0	12.0 ± 2.0	12.0 ± 2.0	12.0 ± 2.0
CO_2 (full load)	vol%	10.0 ± 1.0	10.0 ± 1.0	10.0 ± 1.0	10.0 ± 1.0
O_2 (full load)	vol%	5.7 ± 1.8	5.7 ± 1.8	5.7 ± 1.8	5.7 ± 1.8
Gas consumption	kg/h	2.3	2.3	3.7	4.4
NO_x-emission	mg/kWh GCV	31	39	42	45
Mass flow rate flue gases (minimal load)	kg/h	24.8	24.8	24.8	24.8
Mass flow rate flue gases (nominal load)	kg/h	53.3	55.2	86.4	104.8
Flue gas temperature (nominal load)	ºC	44	54	63	68

1 - Based on 1013.25 mbar and 15°C.

Description	Unit	ECH 87-480	ECH 106-480	ECH 129-480
Gas category 2H: G20				
Diameter of the venturi restrictor	mm	8.60	8.60	8.60
Nominal Load (gross)	kW	88.1	107.3	131.0
Nominal output	kW	85.7	102.4	123.9
Supply pressure	mbar	20	20	20
CO_2 (full load)	vol%	8.9 ± 1.0	8.9 ± 1.0	8.9 ± 1.0
O_2 (full load)	vol%	5.0 ± 1.8	5.0 ± 1.8	5.0 ± 1.8
Gas consumption (1)	m^3/h	8.3	10.1	12.3
NO_x-emission	mg/kWh GCV	34	36	37
Mass flow rate flue gases (minimal load)	kg/h	52.8	52.8	52.8
Mass flow rate flue gases (nominal load)	kg/h	141.9	172.9	211.1
Flue gas temperature (nominal load)	ºC	52	55	60
Gas category 3P: G31				
Diameter of the venturi restrictor	mm	6.60	6.60	6.60
Nominal Load (gross)	kW	86.2	105.7	128.2
Nominal output	kW	85.7	102.4	123.9
Supply pressure	mbar	37 / 50	37 / 50	37 / 50
Gas control valve pressure	mbar	-	-	-
CO_2 (full load)	vol%	9.6 ± 1.0	9.6 ± 1.0	9.6 ± 1.0
O_2 (full load)	vol%	6.3 ± 1.8	6.3 ± 1.8	6.3 ± 1.8
Gas consumption	kg/h	6.1	7.4	9.0
NO_x-emission	mg/kWh GCV	38	39	39
Mass flow rate flue gases (minimal load)	kg/h	53.5	53.5	53.5
Mass flow rate flue gases (nominal load)	kg/h	149.1	181.6	221.7
Flue gas temperature (nominal load)	ºC	52	55	60

1 - Based on 1013.25 mbar and 15ºC.

12.4 Week program card

You can cut the week program card out and keep it near the water heater.

Period		Day	Time	T_{set}	Pump
1	ON			... ºC	ON / OFF
	OFF				
2	ON			... ºC	ON / OFF
	OFF				
3	ON			... ºC	ON / OFF
	OFF				
4	ON			... ºC	ON / OFF
	OFF				
5	ON			... ºC	ON / OFF
	OFF				
6	ON			... ºC	ON / OFF
	OFF				
7	ON			... ºC	ON / OFF
	OFF				
8	ON			... ºC	ON / OFF
	OFF				
9	ON			... ºC	ON / OFF
	OFF				
10	ON			... ºC	ON / OFF
	OFF				
11	ON			... ºC	ON / OFF
	OFF				
12	ON			... ºC	ON / OFF
	OFF				
13	ON			... ºC	ON / OFF
	OFF				
14	ON			... ºC	ON / OFF
	OFF				
15	ON			... ºC	ON / OFF
	OFF				
16	ON			... ºC	ON / OFF
	OFF				
17	ON			... ºC	ON / OFF
	OFF				

18	ON			... ºC	ON / OFF
	OFF				
19	ON			... ºC	ON / OFF
	OFF				
20	ON			... ºC	ON / OFF
	OFF				
21	ON			... ºC	ON / OFF
	OFF				

Example

Period		**Day**	**Time**	**T_{set}**	**Pump**
1	ON	MO	14:30	70 ºC	ON / OFF
	OFF	MO	16:15		

12.5 Electrical wiring diagram

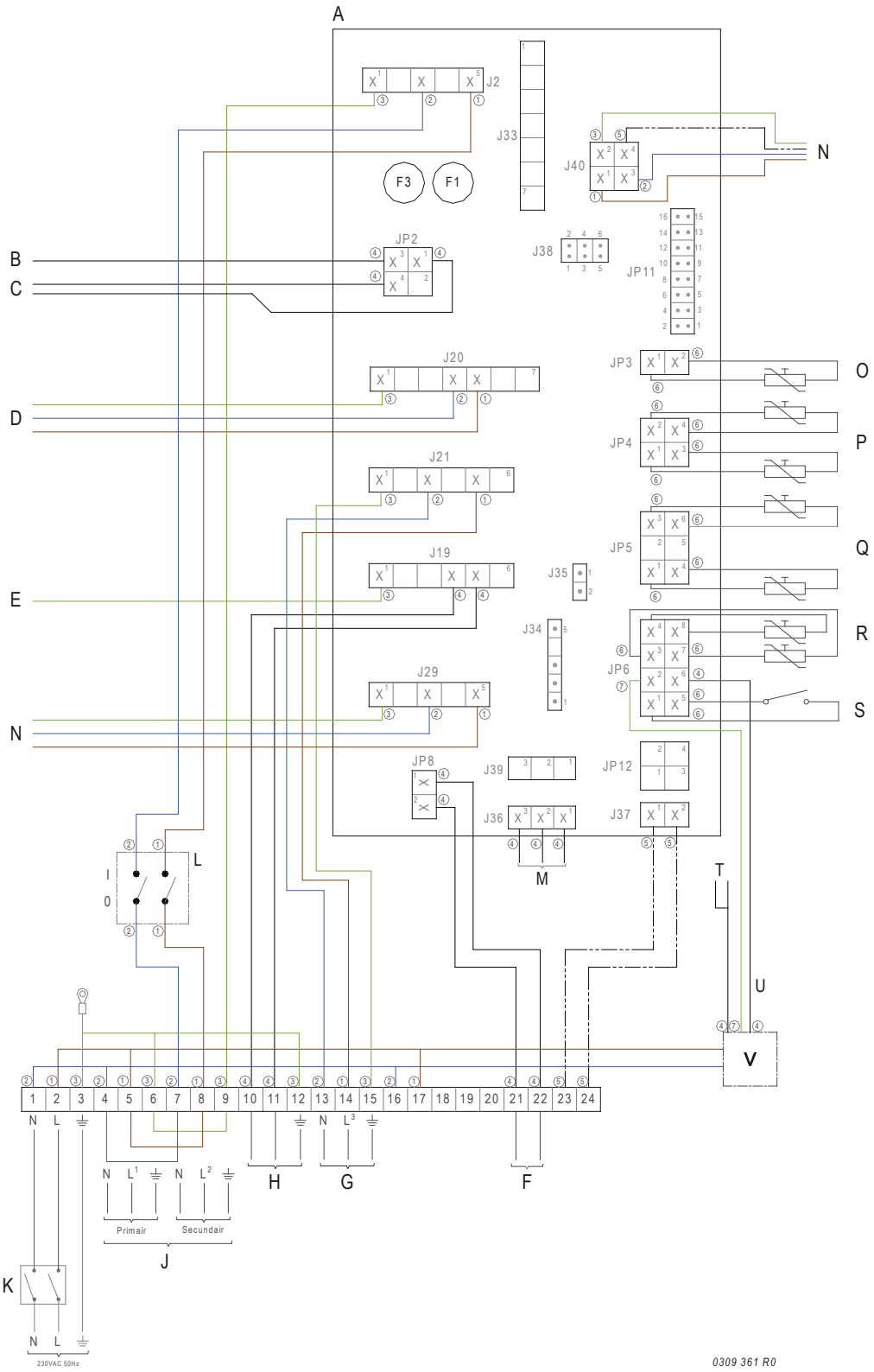

Cable colors:

1	Brown
2	Blue
3	Green
4	Black
5	White
6	Grey/Beige
7	Green

Terminal block connections:

⏚	Earth
N	Neutral
L	Live input of controller
L_1	Phase input of isolating transformer (primary side)
L_2	Phase output of isolating transformer (secondary side)
L_3	Phase input of program-controlled pump

Components:

A	Control
B	Flame probe
C	Hot surface igniter
D	Gas control valve
E	Burner earth connection
F	External ON mode switch
G	Program-controlled pump (max. 100 W)
H	Extra error signal connection
J	Isolating transformer
K	Double-pole isolator
L	Controller O/I switch
M	Display
N	Fan
O	Temperature sensor (T_2 - bottom of tank)
P	Dummy
Q	Temperature sensor (T_1 - top of tank)
R	Selection resistor
S	Push button
T	Electrical anodes
U	Signaling for electrical anodes
V	Potentiostat

Terminal block connections:

J2	Power connection for controller
J19	Extra error signal connection
J20	Gas control valve connection
J21	Program-controlled pump connection
J40	Fan connection
J36	Controller display connection
JP2	Flame probe and hot surface igniter connection
JP3	Temperature sensor T_2 connection
JP4	Dummy connection
JP5	Temperature sensor T_1 connection
JP6	Selection resistor and pressure switch connection
JP8	Extra ON mode switch connection
F1	Fuse (T 3.15 A - 250 V)
F3	Fuse (T 3.15 A - 250 V)

12.6 Menu structure

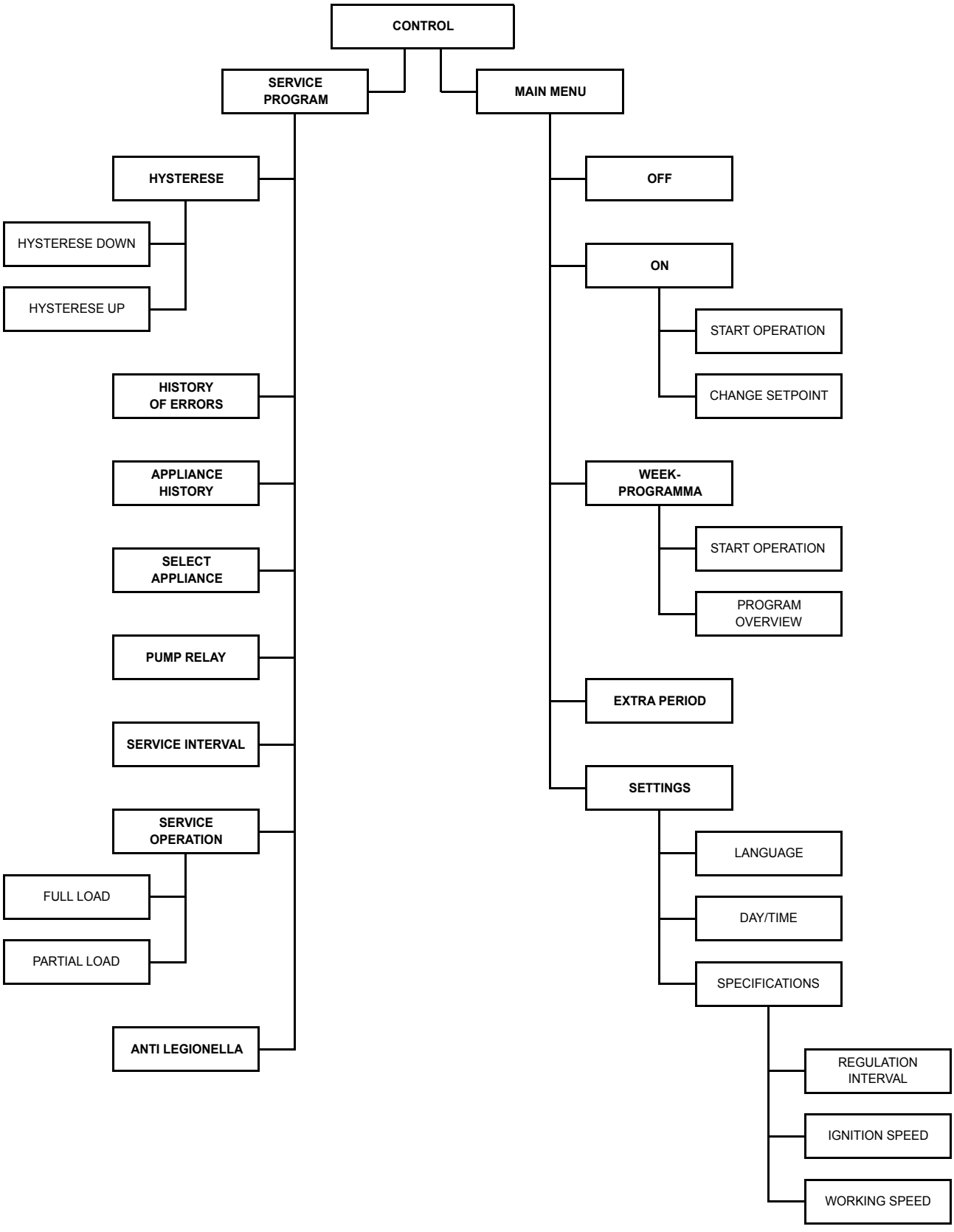

12.7 Declaration of conformity

CE

Lochinvar®
HIGH EFFICIENCY BOILERS & WATER HEATERS

Declaration of Conformity

Supplier: Lochinvar Limited
8 Lombard Way
The MXL Centre
Banbury - United Kingdom

hereby declares that the following products:

Product description: Condensing high efficiency appliance

Product family name: EcoCharger

Product models: ECH 32-220 G CE, ECH 33-370 G CE, ECH 52-370 G CE, ECH 63-370 G CE, ECH 87-480 G CE, ECH 106-480 G CE, ECH 129-480 G CE

on the assumption that the installation instructions have been followed are compliant to:

Gas Appliance Regulations (GAR) - 2016/426
- EN 89:2015

Low Voltage Directive (LVD) - 2014/35/EU
- EN 60335-1:2012
- EN 60335-2-102:2017

Electromagnetic Compatibility Directive (EMC) - 2014/30/EU
- EN 55014-1:2017
- EN 55014-2:2015
- EN 61000-3-2:2014
- EN 61000-3-3:2013

ECO Design Directive (ErP) - 2009/125/EG
- Commission regulation No. 814/2013 based on notices 2014/C - 207/03

as stated in the EC type-examination report, 178889, by KIWA Gastec Certification b.v., The Netherlands.

Company:
Lochinvar Limited

Date:
March 3, 2022

Signature:

T. van der Hamsvoort
Managing Director

Declaration of Conformity

Supplier: Lochinvar Limited
8 Lombard Way
The MXL Centre
Banbury - United Kingdom

hereby declares that the following products:

Product description: Condensing high efficiency appliance

Product family name: EcoCharger

Product models: ECH 32-220 G CE, ECH 33-370 G CE, ECH 52-370 G CE, ECH 63-370 G CE, ECH 87-480 G CE, ECH 106-480 G CE, ECH 129-480 G CE

on the assumption that the installation instructions have been followed are compliant to:

Gas Appliances (Enforcement) and Miscellaneous Amendments Regulations 2018 (UK SI 2018 No. 389)
- EN 89:2015

Electrical Equipment (Safety) Regulations 2016 (UK SI 2016 No. 1101)
- EN 60335-1:2012
- EN 60335-2-102:2017

Electromagnetic Compatibility Regulations 2016 (UK SI 2016 No. 1091)
- EN 55014-1:2017
- EN 55014-2:2015
- EN 61000-3-2:2014
- EN 61000-3-3:2013

Ecodesign for Energy-Related Products Regulations 2010 (UK SI 2010 No. 2617)
- Commission regulation No. 814/2013 based on notices 2014/C - 207/03

as stated in the EC type-examination report, 178889, by KIWA Gastec Certification b.v., The Netherlands.

Company:
Lochinvar Limited

Date:
July 1, 2022

Signature:

T. van der Hamsvoort
Managing Director

12.8 Warranty

Article 1: General warranty

If within 1 (one) year of the invoice date or commissioning date of a water heater supplied by Lochinvar Ltd., following verification, and at the sole discretion of Lochinvar Ltd., an assembly or part (with exclusion of the tank) proves to be defective or fails to function correctly due to manufacturing and/or material defects, then Lochinvar Ltd. shall repair or replace this assembly or part.

Article 2: Warranty

If within 3 (three) years of the invoice date or commissioning date of a water heater supplied by Lochinvar Ltd., following verification, and at the sole discretion of Lochinvar Ltd., the enamel-lined steel tank proves to be leaking due to rust or corrosion occurring on the water side, then Lochinvar Ltd. shall offer to replace the defective water heater with an entirely new water heater of equivalent size and quality The warranty period given on the replacement water heater shall be equal to the remaining warranty period of the original water heater that was supplied.

Article 3: Conditions for installation and use

The warranty set out in articles 1 and 2 will apply solely under the following conditions:

1. The water heater is installed under strict adherence to Lochinvar Ltd. installation instructions for the specific model, and must be in accordance with the relevant requirements of the Gas Safety Regulations, Building Regulations, I.E.E. Regulations and the byelaws of the local water undertaking. The installation should also be in accordance with any relevant requirements of the local gas distributor and local authority.
2. The water heater remains installed at the original site of installation.
3. The water heater is used exclusively with drinking water, which at all times can freely circulate (a separately installed heat exchanger is mandatory for heating saline water or corrosive water).
4. The tank is safeguarded against harmful scaling and lime build-up by means of periodic maintenance.
5. The water temperatures in the heater do not exceed the maximum setting of the thermostats, which form a part of the water heater.
6. The water pressure and/or heat load do not exceed the maximum values stated on the water heater rating plate.
7. The water heater is installed in a non-corrosive atmosphere or environment.
8. The water heater is connected to a protected cold supply arrangement, which is: approved by the relevant authority; with sufficient capacity for this purpose; supplying a pressure no greater than the working pressure stated on the water heater; and where applicable by a likewise approved temperature and pressure relief valve, fitted in accordance with installation instructions of Lochinvar Ltd. applying to the specific model of water heater, and further in compliance with Building Regulations, local authority installation byelaws and the Water Supply (Water Fittings) Regulations 1999.
9. The water heater is protected with an electrical powered anode that provides cathodic protection at all times. The water heater is equipped with a powered anode, which passes a small current from the electrode, immersed in the water, on to the inner surface of the water heater. It is possible, over time, that the electrode rod may become covered with a thin film that prevents sufficient current to flow, this can be remedied by removing the film on the electrode rod with a clean cloth, do not use abrasive cleaning products. It is a requirement, of the powered anode system, that the water heater is connected to 230 v power supply. There must be no switches, such as time control, in the main power supply other than the double-pole isolator. Time control can be achieved by other means without interrupting the main power supply. Incorrect installation of the main power supply will invalidate the warranty of the water heater.

Article 4: Exclusions

The warranty set out in articles 1 and 2 will not apply in the event of:

10. damage to the water heater caused by an external factor;
11. misuse, neglect (including frost damage), modification and incorrect and/or unauthorized use of the water heater;
12. contaminants or other substances having been allowed to enter the tank;
13. any attempts at repair to a defective water heater other than by an approved service engineer;
14. the conductivity of the water being less than 125 µS/cm and/or the hardness (alkaline earth ions) of the water being less than 1.00 mmol/litre;
15. unfiltered, recirculated water flowing through or being stored in the water heater.

Article 5: Scope of the warranty

The obligations of Lochinvar Ltd. pursuant to the specified warranty are limited to free delivery from the warehouse of the replacement assemblies, parts or water heater, respectively. Labor, installation and any other costs associated with the replacement will not be accepted by Lochinvar Ltd.

Article 6: Claims

A claim on grounds of the specified warranty must be submitted to the dealer from whom the water heater was purchased, or to another authorized dealer of Lochinvar Ltd.. Inspection of the water heater as referred to in articles 1 and 2 shall take place in one of the laboratories of Lochinvar Ltd.

Article 7: Obligations of Lochinvar Ltd.

Lochinvar Ltd. grants no other warranty or guarantee over its water heaters nor the (assemblies or parts of) water heaters supplied for replacement, other than the warranty expressly set out in these conditions. Under the terms of the supplied warranty, Lochinvar Ltd. is not liable for damage to persons or property caused by (assemblies or parts, or the glass-lined steel tank of) a (replacement) water heater that it has supplied.

Index

A

About the water heater..... 43
About this manual..... 7
Adding times to a week program..... 34
Additional error signal..... 67
Ambient conditions..... 53
Anode warning..... 23
Appendices..... 97

B

Buttons..... 20

C

C13/C33 concentric systems..... 60
C13/C33 parallel systems..... 62
C43/C53/C63 systems..... 64
Changing legionella prevention start time 83
Changing the appliance's standard week program..... 31
Circulation pipe..... 56
Clean the burner..... 87
Clean the condensate drain..... 87
Clean the heat exchanger..... 87
CO###sub2### adjustment..... 71
Cold water side..... 57, 56
Commissioning..... 67
Compliance..... 4
Condensation drain..... 57
Conditions..... 53
Contact information..... 5
Control switch..... 20
Conversion of gas type..... 77
Copyright..... 3
Copyright..... 3

D

Declaration of conformity..... 112
Decommisioning..... 74
Deleting times from a week program..... 35
Descale the tank..... 86
Dimensions..... 101
Display the error history..... 80
Display the selected water heater..... 81
Display the water heater history..... 80
Displayed errors..... 91
Displaying water heater specifications..... 40
Disposal..... 51
Document identification..... 8
Draining..... 74
Draining unvented installations..... 74
Draining vented installations..... 75

E

Electrical connections..... 65
Electrical wiring diagram..... 109
Environmental aspects..... 50
Error conditions..... 22
Errors and warnings..... 89
Explanation of icons..... 19
External ON mode switch..... 66
EXTRA..... 21
Extra period..... 36

F

Fan..... 49
Filling..... 67
Filling unvented installations..... 67
Filling vented installations..... 67
Finalization..... 88
Flame probe..... 49

G

Gas connection..... 58
Gas control valve..... 49
Gas details..... 105
Gas-side maintenance..... 87
General errors..... 90

H

Hot water side..... 56, 57
Hysteresis..... 79

I

Installation..... 53
Installation diagram..... 55
Installation, Maintenance and Service part..... 41
Instructions on the water heater..... 48
Interface..... 19
Introduction..... 15, 43
Isolate from the mains..... 28
Isolating transformer..... 66

L

Liability..... 3

M

Main menu..... 29
Mains power..... 66
Maintenance..... 85
Maximum floor load..... 53
Menu structure..... 111

N

Notation conventions..... 7
Notation conventions for menu-related instructions..... 29

O

OFF..... 21
ON..... 21
Operating cycle..... 45
Operating modes..... 21
Operator interface..... 19, 79
Optional electrical connections..... 66

P

Packaging..... 53
PC connection..... 20
Preface..... 3
Preparation..... 85
Preparation..... 65
Pressure switch..... 49
Procedure for checking the gas control valve pressure..... 70, 70
Procedure for checking the supply pressure..... 68
PROG..... 22
Program-controlled pump..... 66
Programming an extra period..... 36
Protection for the water heater..... 49

R

Recycling..... 50
Regulations..... 4

S

Safety..... 17, 47
Safety devices..... 49
Safety instructions..... 47
Safety of the installation..... 50
Scope..... 7
Service conditions..... 23
Service mode..... 82
Service program..... 79
Setting day and time..... 39
Setting legionella prevention..... 82
Setting menu language..... 38
Setting the central heating configuration 83
Setting the service interval..... 81
Setting the water temperature..... 30
Setting the water temperature via the SET POINT menu..... 30
Setting water temperature during ON mode..... 30
Settings..... 38
Settings..... 79
Starting and stopping the week program 31
Status of the water heater..... 21
Switch the pump on or off..... 81
Switching legionella prevention on and off 83

Switching pressure measurement..... 74
Switching to ON mode.....30
Working clearances.....54
Working principle.....43

T

T&P valve..... 50
Target group.....7
Technical details.....97
The appliance's heating cycle.....25, 43
Trademark..... 3
Trademarks..... 3
Troubleshooting.....89
Turn off for a long period..... 28
Turn off for a short period.....27
Turn off the water heater..... 27, 74
Turn on the water heater.....25
Turn on the water heater.....74

U

Unvented installation..... 50
Unvented water connections..... 56
Use.....25
User part.....13

V

Vented installation..... 50
Vented water connections..... 57
Venting system..... 58

W

Warnings.....96
Warranty..... 113
Warranty.....3
Water composition..... 54
Water connections..... 56
Water temperature protection..... 49
Water-side maintenance..... 86
Week program..... 30
Week program card.....107
Week program: setting the program-controlled pump..... 33
Week program: setting the switch-off time 33
Week program: setting the switch-on time 32
Week program: setting the water temperature..... 33

Lochinvar®
HIGH EFFICIENCY BOILERS & WATER HEATERS

8 Lombard Way, The MXL Centre, Banbury, Oxon, OX16 4TJ
Tel: +44(0) 1295 269 981, Fax:+44(0) 1295 271 640, Email: info@lochinvar.ltd.uk
www.lochinvar.ltd.uk

Lochinvar Ltd reserves the right to change specifications without prior notice